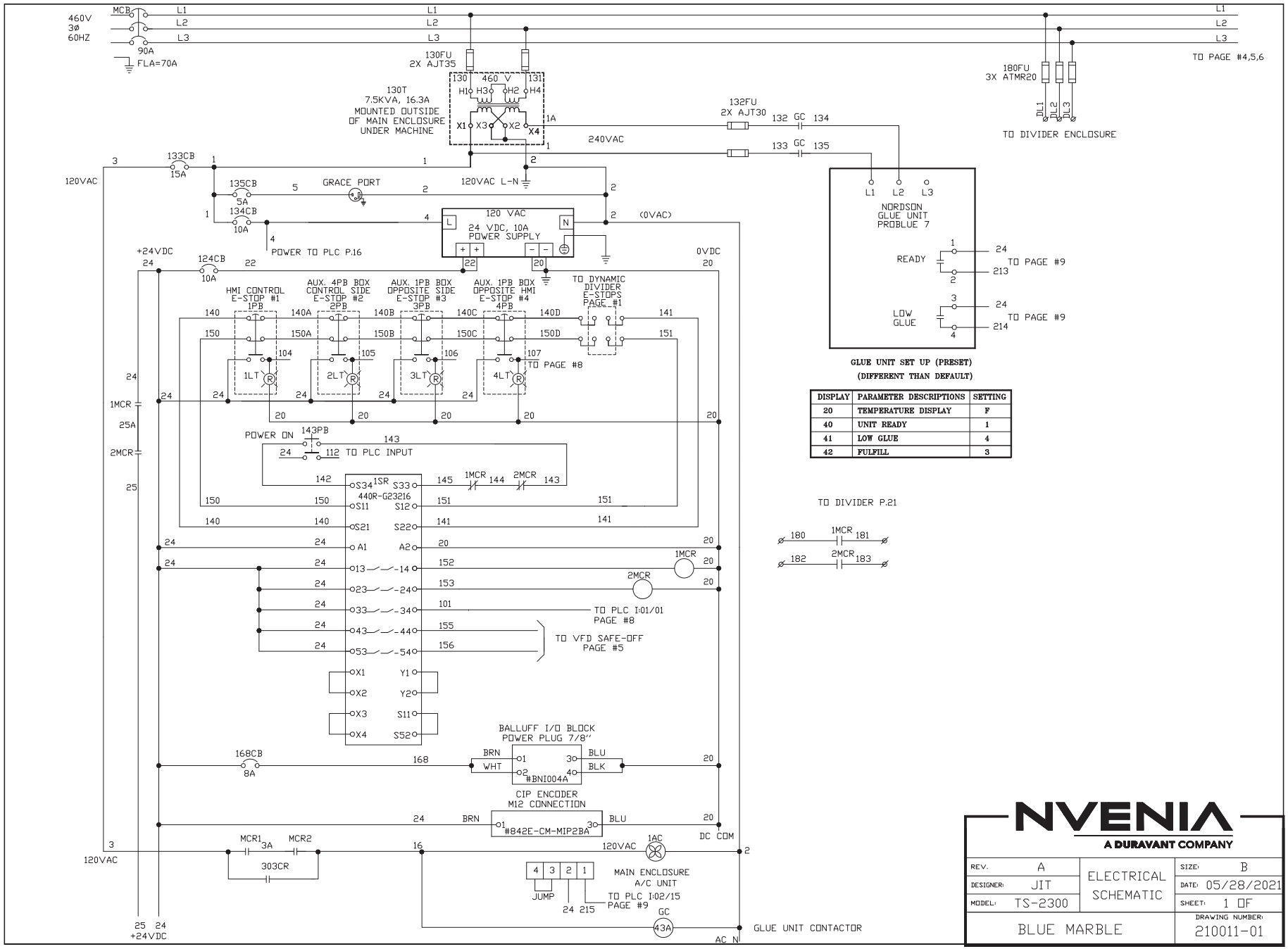

GLUE UNIT SET UP (PRESET)
(DIFFERENT THAN DEFAULT)

DISPLAY	PARAMETER DESCRIPTIONS	SETTING
20	TEMPERATURE DISPLAY	F
40	UNIT READY	1
41	LOW GLUE	4
42	FULFILL	3

NVENIA
A DURAVANT COMPANY

REV. A	ELECTRICAL SCHEMATIC	SIZE: B	
DESIGNER: JIT		DATE: 05/28/2021	
MODEL: TS-2300		SHEET: 1 OF	
BLUE MARBLE		DRAWING NUMBER: 210011-01	

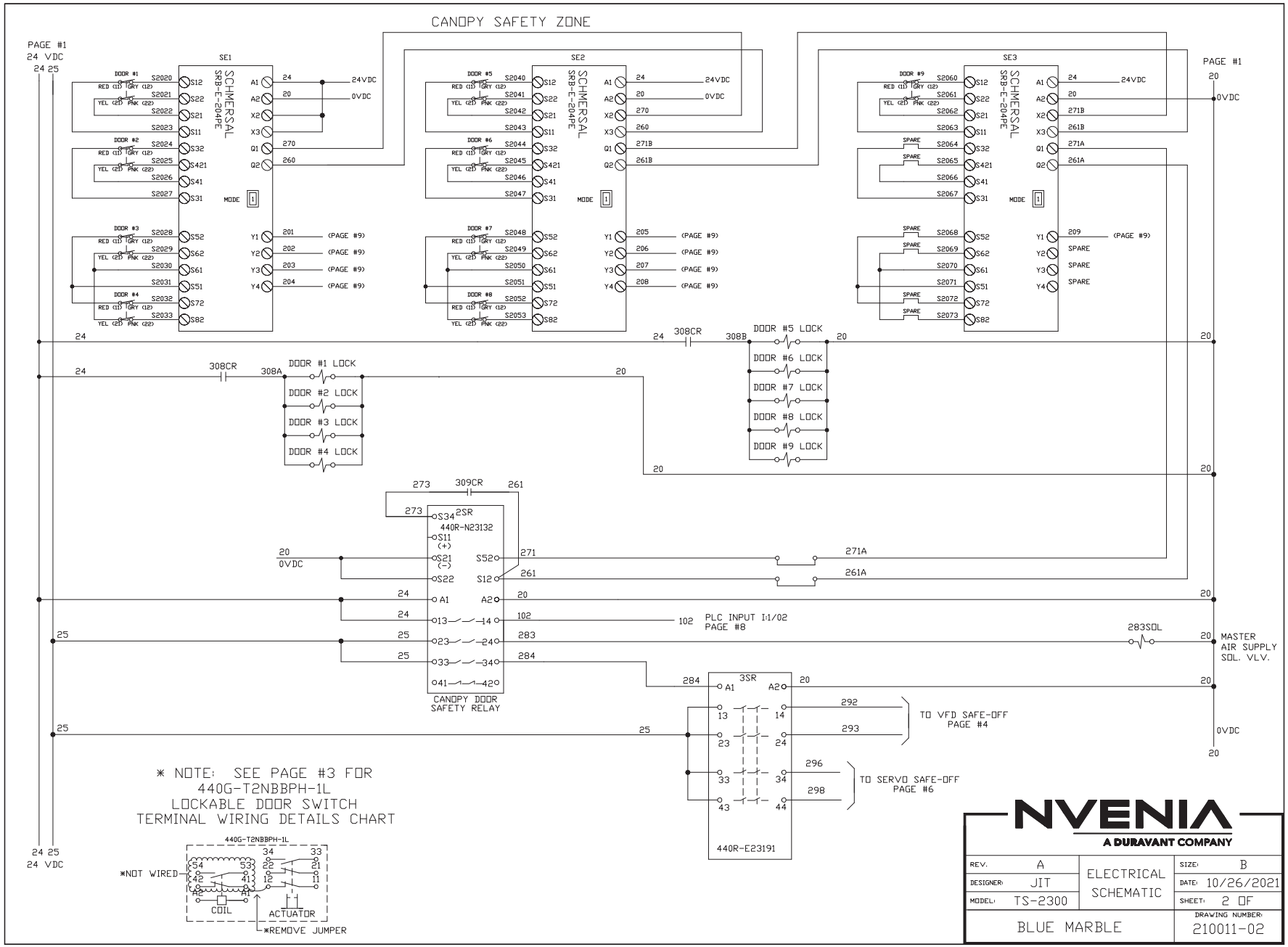
CANOPY SAFETY ZONE
PAGE #1
24 VDC
SE1
SE2
SE3
SCHMERSAL
SRB-E-204PE
24VDC
0VDC
(PAGE #9)
SPARE
DOOR #1 LOCK
DOOR #2 LOCK
DOOR #3 LOCK
DOOR #4 LOCK
DOOR #5 LOCK
DOOR #6 LOCK
DOOR #7 LOCK
DOOR #8 LOCK
DOOR #9 LOCK
308CR
309CR
2SR
440R-N23132
CANOPY DOOR
SAFETY RELAY
PLC INPUT I:1/02
PAGE #8
283SOL
MASTER
AIR SUPPLY
SOL. VLV.
3SR
440R-E23191
TO VFD SAFE-OFF
PAGE #4
TO SERVO SAFE-OFF
PAGE #6
* NOTE: SEE PAGE #3 FOR
440G-T2NBBPH-1L
LOCKABLE DOOR SWITCH
TERMINAL WIRING DETAILS CHART
440G-T2NBBPH-1L
*NOT WIRED
COIL
ACTUATOR
*REMOVE JUMPER
NVENIA
A DURAVANT COMPANY
REV. A
DESIGNER: JIT
MODEL: TS-2300
ELECTRICAL
SCHEMATIC
SIZE: B
DATE: 10/26/2021
SHEET: 2 OF
BLUE MARBLE
DRAWING NUMBER:
210011-02

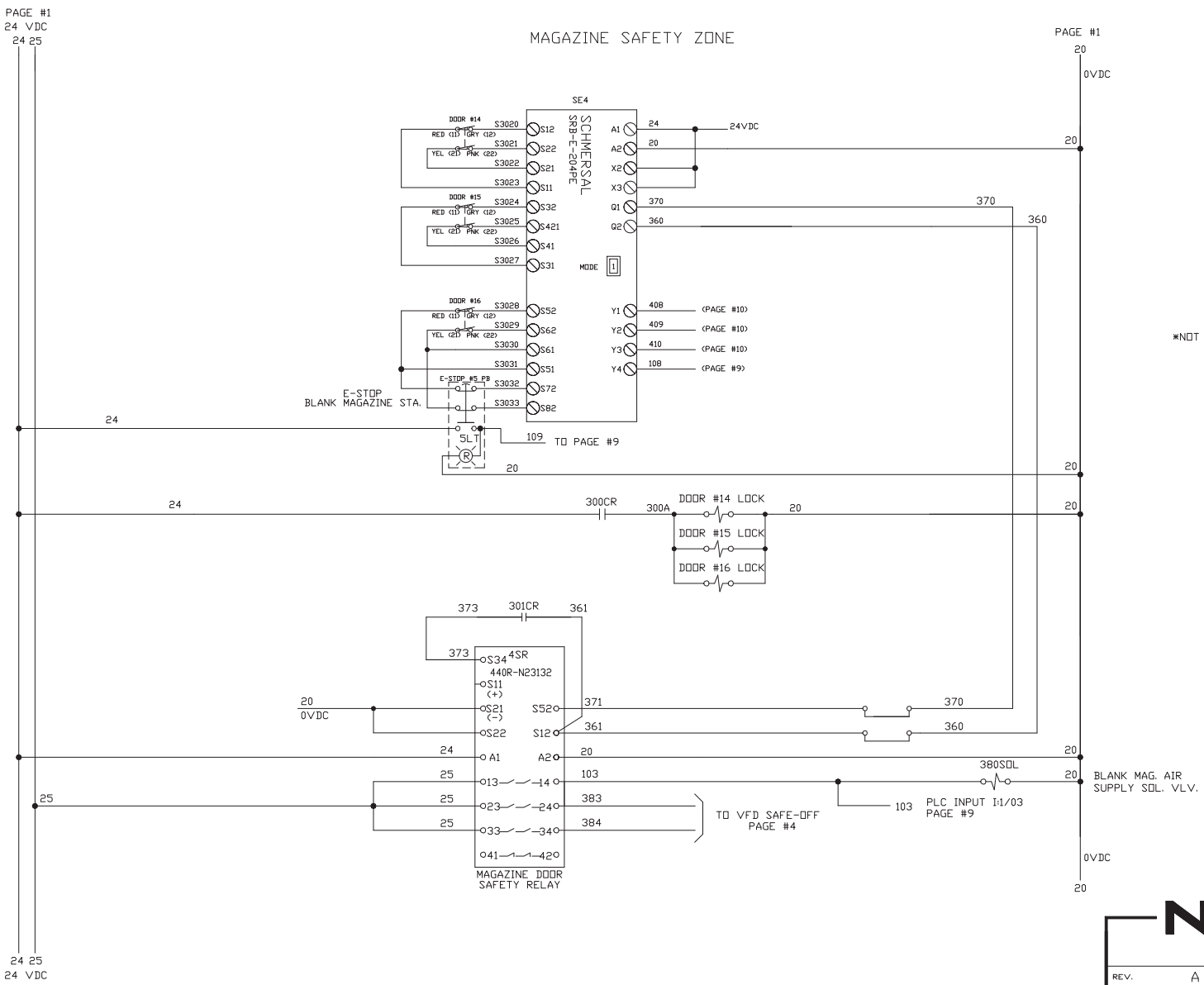

440G-T2NBBPH-1L
LOCKABLE DOOR SWITCH
TERMINAL WIRING DETAILS

TERMINAL	COLOR	DESCRIPTION
A1	GRN	SOLENOID POWER
A2	BLUE	0VDC
11	RED	SAFETY A
12	RED/BLK	SAFETY A
21	RED/WHT	SAFETY B
22	RED/YEL	SAFETY B
33	BRN	+24 VDC
34	WHT	AUX. CONTACT (TO PLC)
41	N/A	*NOT CONNECTED
42	N/A	*NOT CONNECTED
53	N/A	*NOT CONNECTED
54	N/A	*NOT CONNECTED

**REMOVE JUMPER BETWEEN 12 AND 41

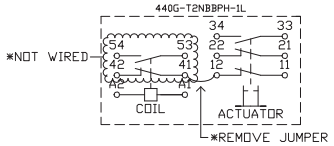

NVENIA
A DURAVANT COMPANY

REV. A	ELECTRICAL SCHEMATIC	SIZE: B	
DESIGNER: JIT		DATE: 05/26/2021	
MODEL: TS-2300		SHEET: 3 OF	
BLUE MARBLE		DRAWING NUMBER: 210011-03	

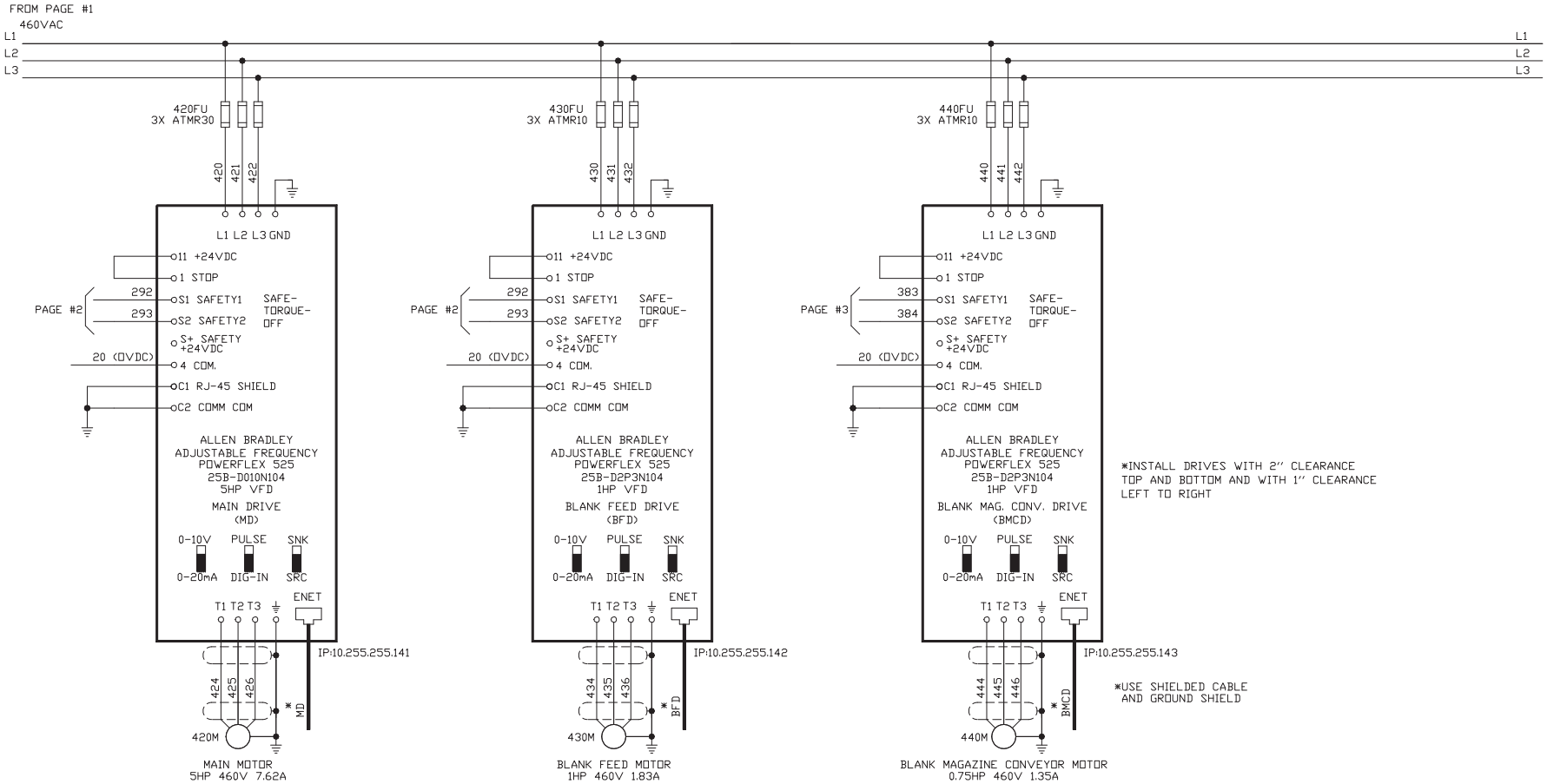

USE VFD CABLE PROVIDED. THIS IS RATED FOR TRAYS. ALSO, USE SHIELD CONNECTORS AT MOTOR SIDE.

*** SET TO THE MAXIMUM ALLOWABLE MOTOR CURRENT**

POWERFLEX 525 MAIN DRIVE SET UP (PRESET)
(DIFFERENT THAN DEFAULT)

DISPLAY	PARAMETER DESCRIPTIONS	SETTING
P031	RATED VOLTAGE	460
P033	MOTOR OL CURRENT	*
P046	START SOURCE	5 ETH
P047	SPEED REFERENCE	15 ETH
P041	ACCELERATION TIME	1
P042	ACCELERATION TIME	0.5
P044	MAXIMUM FREQUENCY	60
A543	START AT POWER UP	1.0

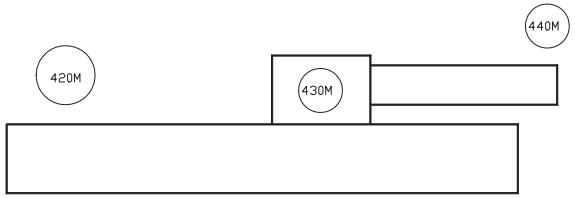

NVENIA
A DURAVANT COMPANY

REV. A	ELECTRICAL SCHEMATIC	SIZE: B	
DESIGNER: JIT		DATE: 05/26/2021	
MODEL: TS-2300		SHEET: 4 OF	
BLUE MARBLE		DRAWING NUMBER: 210011-04	

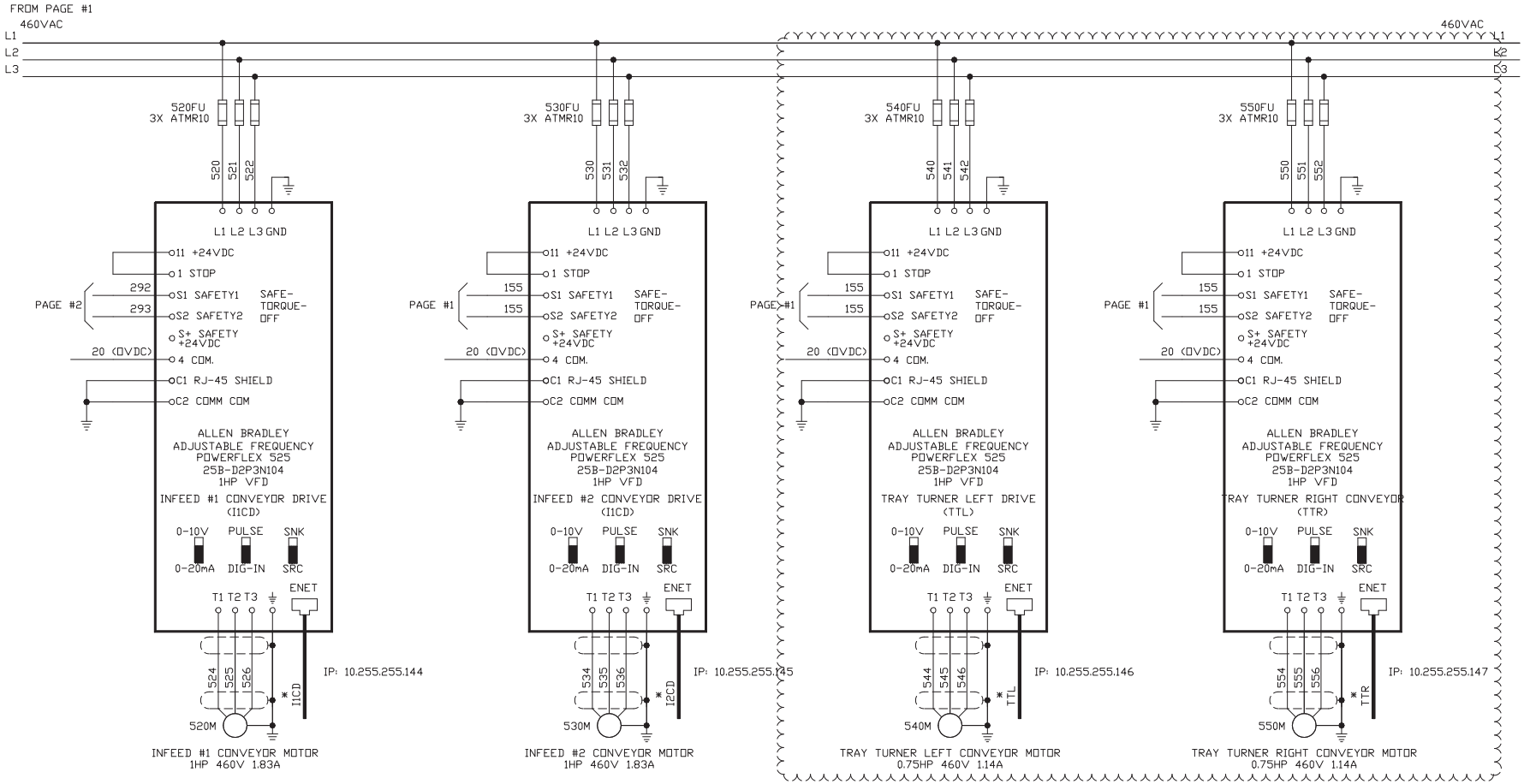

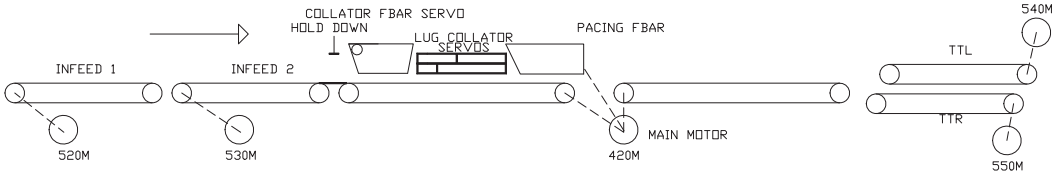

POWERFLEX 525 MAIN DRIVE SET UP (PRESET)
(DIFFERENT THAN DEFAULT)

DISPLAY	PARAMETER DESCRIPTIONS	SETTING
P031	RATED VOLTAGE	460
P033	MOTOR OL CURRENT	*
P046	START SOURCE	5 ETH
P047	SPEED REFERENCE	15 ETH
P041	ACCELERATION TIME	1
P042	ACCELERATION TIME	0.5
P044	MAXIMUM FREQUENCY	90
A543	START AT POWER UP	1.0

* SET TO THE MAXIMUM ALLOWABLE MOTOR CURRENT

NVENIA
A DURAVANT COMPANY

REV. A	ELECTRICAL SCHEMATIC	SIZE: B	
DESIGNER: JIT		DATE: 11/01/2021	
MODEL: TS-2300		SHEET: 5 OF	
BLUE MARBLE		DRAWING NUMBER: 210011-05	

460V
3ø
60HZ

L1
L2
L3

680FU
3X KTK-R-20

681 682 683

GRN

AC POWER BUS TO CLLD

DC POWER AND CONTROL POWER
BUS CONNECTOR JUMPS
TO EACH SERVO

DC POWER AND CONTROL POWER
BUS CONNECTOR JUMPS
TO EACH SERVO

+24VDC
24

UPPER LUG HOME
691PRX

BRN
N.O.
BLK 691
BLU 20

20

HOME 1 INPUT
I/O COMMON
I/O SHIELD TERMINATION

1 BN
4 BKR
3 BU
PNP
+
-

DC POWER
CONNECTOR

(GROUND CHASIS
TO GROUND)

L1 L2 L3 GRN

1 2
CONTROL POWER

DIGITAL INPUTS
1 IN1
2 COM
3 IN2
4 SHLD

SHUNT POWER
1
2

ALLEN BRADLEY
KINETIX 5500
2198-H025-ERS
AXIS MODULE
COLLATOR UPPER LUG SERVO CONTROLLER AND DRIVE
(CULD)

SAFE OFF
SB+ BYPASS PLUS
SB- BYPASS MINUS
S1 SAFETY ENABLE 1
SC SAFETY ENABLE COM
S2 SAFETY ENABLE 2

SAFE OFF
PAGE 2

296
20
297

*INTALL WITH 1.6'' CLEARANCE TOP AND BOTTOM

Kinetix 5500 Servo Drive System (top view)

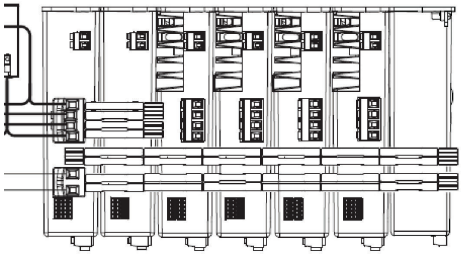

Shared AC (mains AC input)
Shared DC (DC common bus)
Shared 24V (control power inpu

MOTOR FEEDBACK
CONNECTOR
MF

MOTOR CONNECTOR
U V W GND

MOTOR BRAKE
BLK 1
WHT 2
(GROUND MOTOR
BRAKE CABLE
WHEN USED)

PORT 1
PORT 2

IP:10.255.255.131

SINGLE CABLE
2090-CSWM1DF-14AA15

(CLAMP SHIELDED
CABLE TO SERVO)

(#1585J-M8CBJM-2)
(#1585J-M8CBJM-2)

FROM PAGE #16

A BROWN
B BLACK
C BLUE
D GRN/YEL

U V W GND MBRK+ MBRK-
BRAKE

680M

ENCODER

MOTOR
VPL-B1003F-PJ12AA

2198-H2DCK CONVERTER KIT PINOUT		
TERMINAL	SIGNAL	WIRE COLOR
1	SIN+	BLACK
2	SIN-	WHITE/BLACK
3	COS+	RED
4	COS-	WHITE/RED
5	DATA+	GREEN
6	ECOM	WHITE/GRAY
7	EPWR_9V	ORANGE
10	DATA-	WHITE/GREEN
11	TS+	WHITE/ORANGE
14	EPWR_5V	GRAY

DIGITAL INPUTS (IOD) CONNECTOR PINOUT	
IOD PIN	DESCRIPTION
1	HIGH SPEED REGISTRATION/HOME POSITION (DUAL FUNCTION INPUT)
2	I/O COMMON
3	HIGH SPEED REGISTRATION INPUT. HIGH/LOW OR LOW/HIGH TRIGGERS REGISTRATION
4	I/O CABLE SHIELD TERMINATION

NVENIA
A DURAVANT COMPANY

REV.	A	ELECTRICAL SCHEMATIC	SIZE: B
DESIGNER:	JIT		DATE: 09/26/2021
MODEL:	TS-2300		SHEET: 6 OF
BLUE MARBLE			DRAWING NUMBER: 210011-06

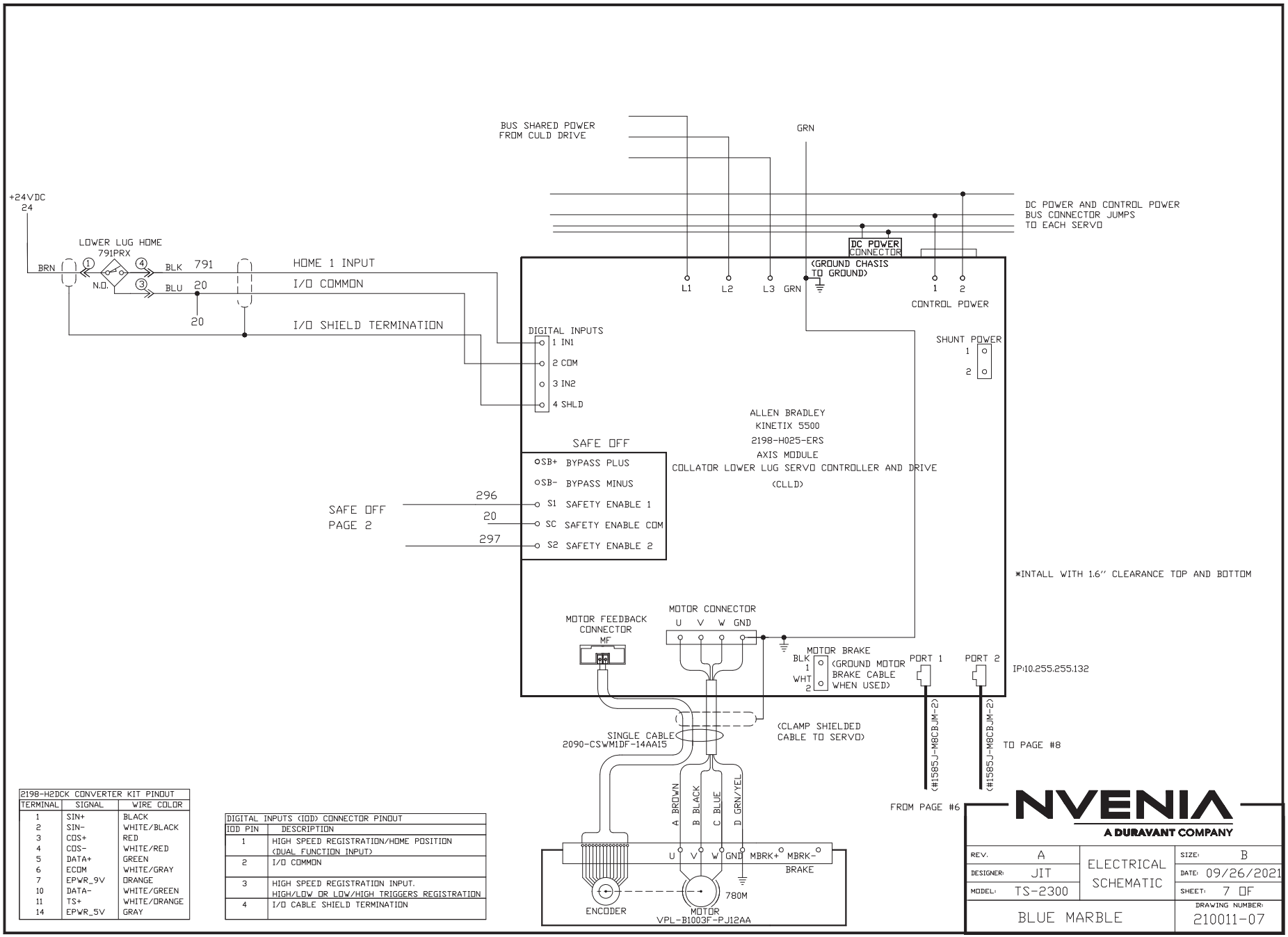

2198-H2DCK CONVERTER KIT PINOUT		
TERMINAL	SIGNAL	WIRE COLOR
1	SIN+	BLACK
2	SIN-	WHITE/BLACK
3	COS+	RED
4	COS-	WHITE/RED
5	DATA+	GREEN
6	ECOM	WHITE/GRAY
7	EPWR_9V	ORANGE
10	DATA-	WHITE/GREEN
11	TS+	WHITE/ORANGE
14	EPWR_5V	GRAY

DIGITAL INPUTS (IOD) CONNECTOR PINOUT	
IOD PIN	DESCRIPTION
1	HIGH SPEED REGISTRATION/HOME POSITION (DUAL FUNCTION INPUT)
2	I/O COMMON
3	HIGH SPEED REGISTRATION INPUT. HIGH/LOW OR LOW/HIGH TRIGGERS REGISTRATION
4	I/O CABLE SHIELD TERMINATION

NVENIA
A DURAVANT COMPANY

REV. A	ELECTRICAL SCHEMATIC	SIZE: B	
DESIGNER: JIT		DATE: 09/26/2021	
MODEL: TS-2300		SHEET: 7 OF	
BLUE MARBLE		DRAWING NUMBER: 210011-07	

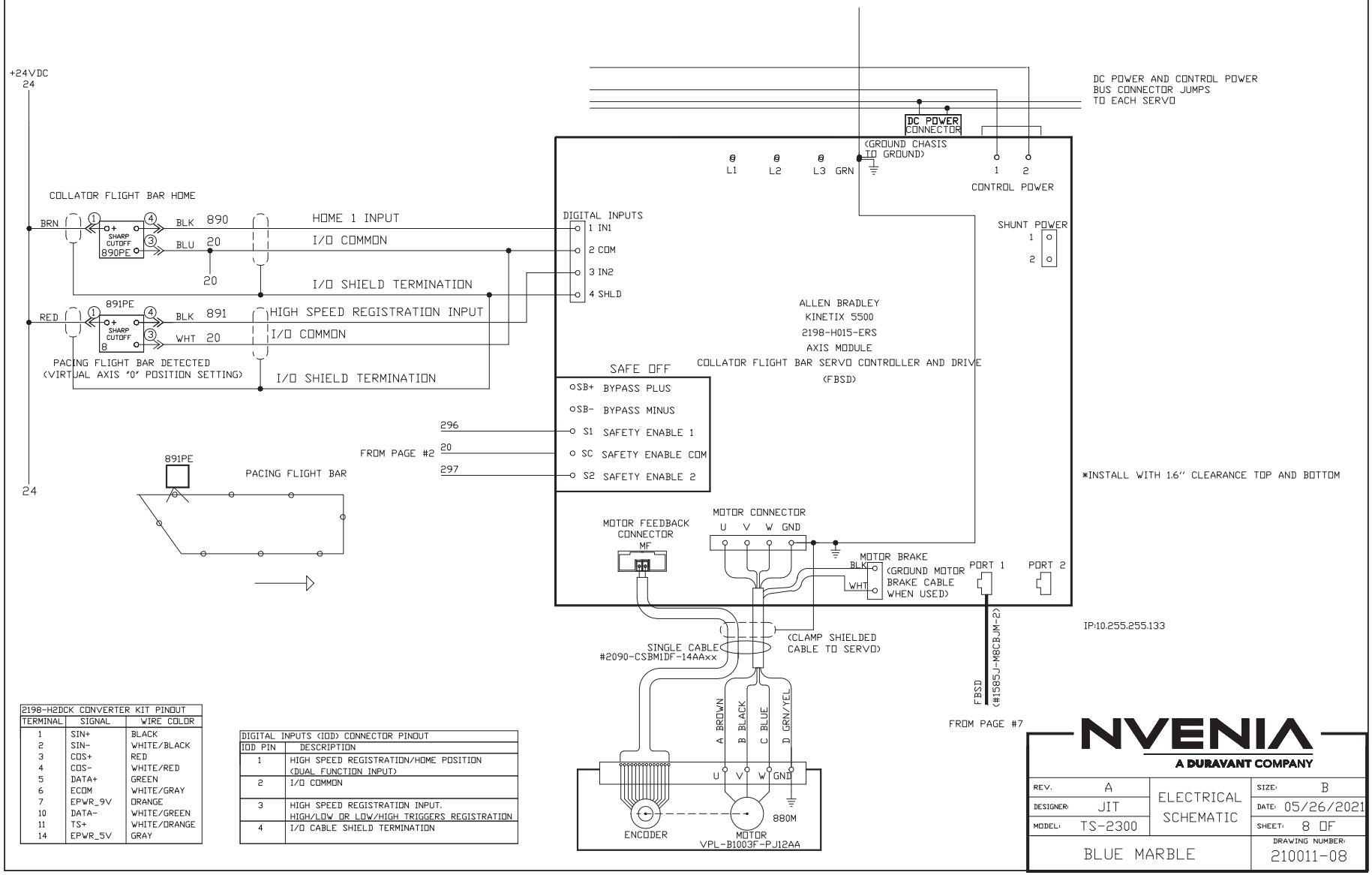

2198-H2DCK CONVERTER KIT PINOUT		
TERMINAL	SIGNAL	WIRE COLOR
1	SIN+	BLACK
2	SIN-	WHITE/BLACK
3	COS+	RED
4	COS-	WHITE/RED
5	DATA+	GREEN
6	ECOM	WHITE/GRAY
7	EPWR_9V	ORANGE
10	DATA-	WHITE/GREEN
11	TS+	WHITE/ORANGE
14	EPWR_5V	GRAY

DIGITAL INPUTS (IOD) CONNECTOR PINOUT	
IOD PIN	DESCRIPTION
1	HIGH SPEED REGISTRATION/HOME POSITION (DUAL FUNCTION INPUT)
2	I/O COMMON
3	HIGH SPEED REGISTRATION INPUT. HIGH/LOW OR LOW/HIGH TRIGGERS REGISTRATION
4	I/O CABLE SHIELD TERMINATION

NVENIA
A DURAVANT COMPANY

REV. A	ELECTRICAL SCHEMATIC	SIZE: B	
DESIGNER: JIT		DATE: 05/26/2021	
MODEL: TS-2300		SHEET: 8 OF	
BLUE MARBLE		DRAWING NUMBER: 210011-08	

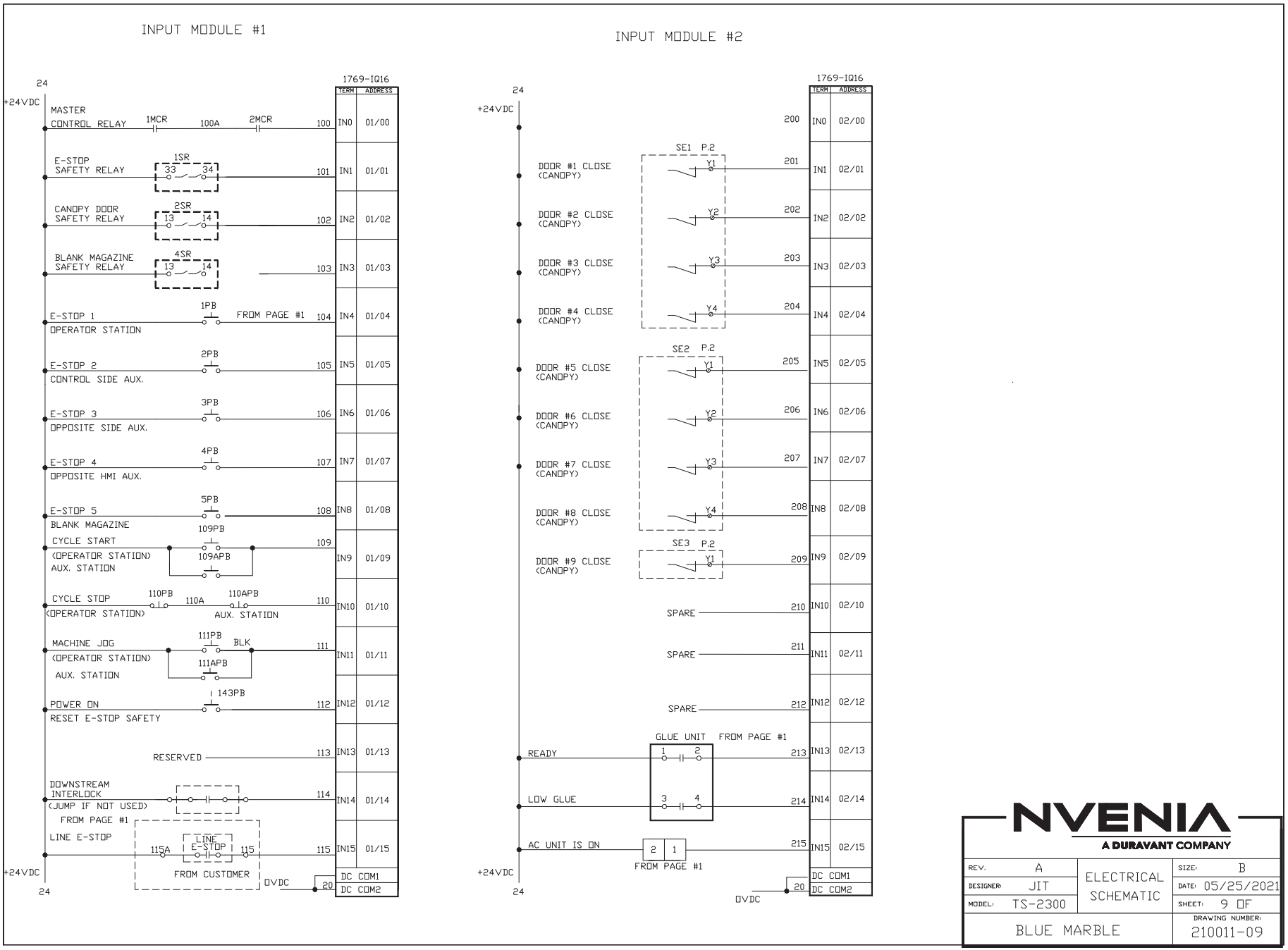

NVENIA
A DURAVANT COMPANY

REV. A	ELECTRICAL SCHEMATIC	SIZE: B	
DESIGNER: JIT		DATE: 05/25/2021	
MODEL: TS-2300		SHEET: 9 OF	
BLUE MARBLE		DRAWING NUMBER: 210011-09	

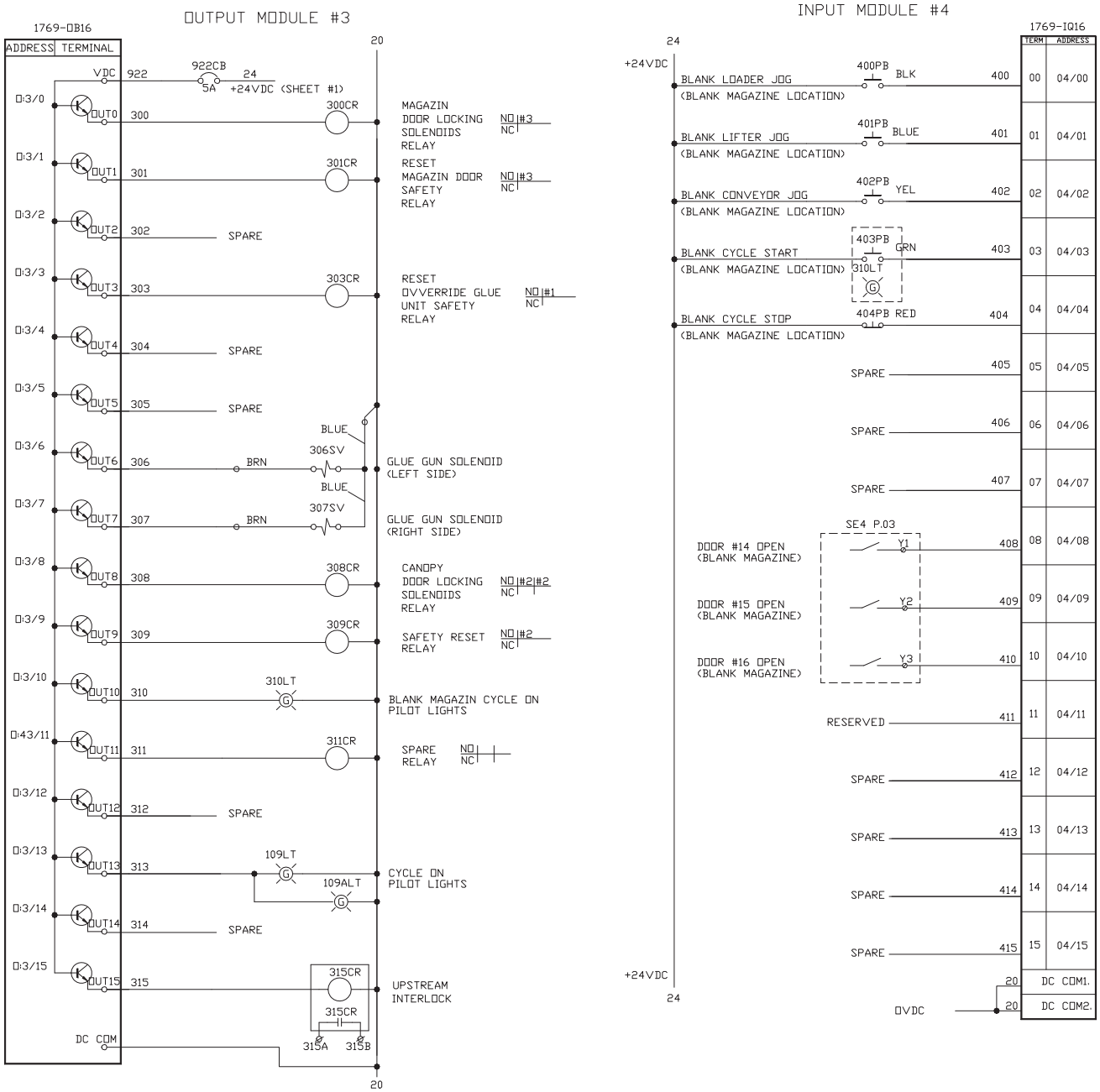

NVENIA
A DURAVANT COMPANY

REV. A	ELECTRICAL SCHEMATIC	SIZE: B	
DESIGNER: JIT		DATE: 05/26/2021	
MODEL: TS-2300		SHEET: 10 OF	
BLUE MARBLE		DRAWING NUMBER: 210011-10	

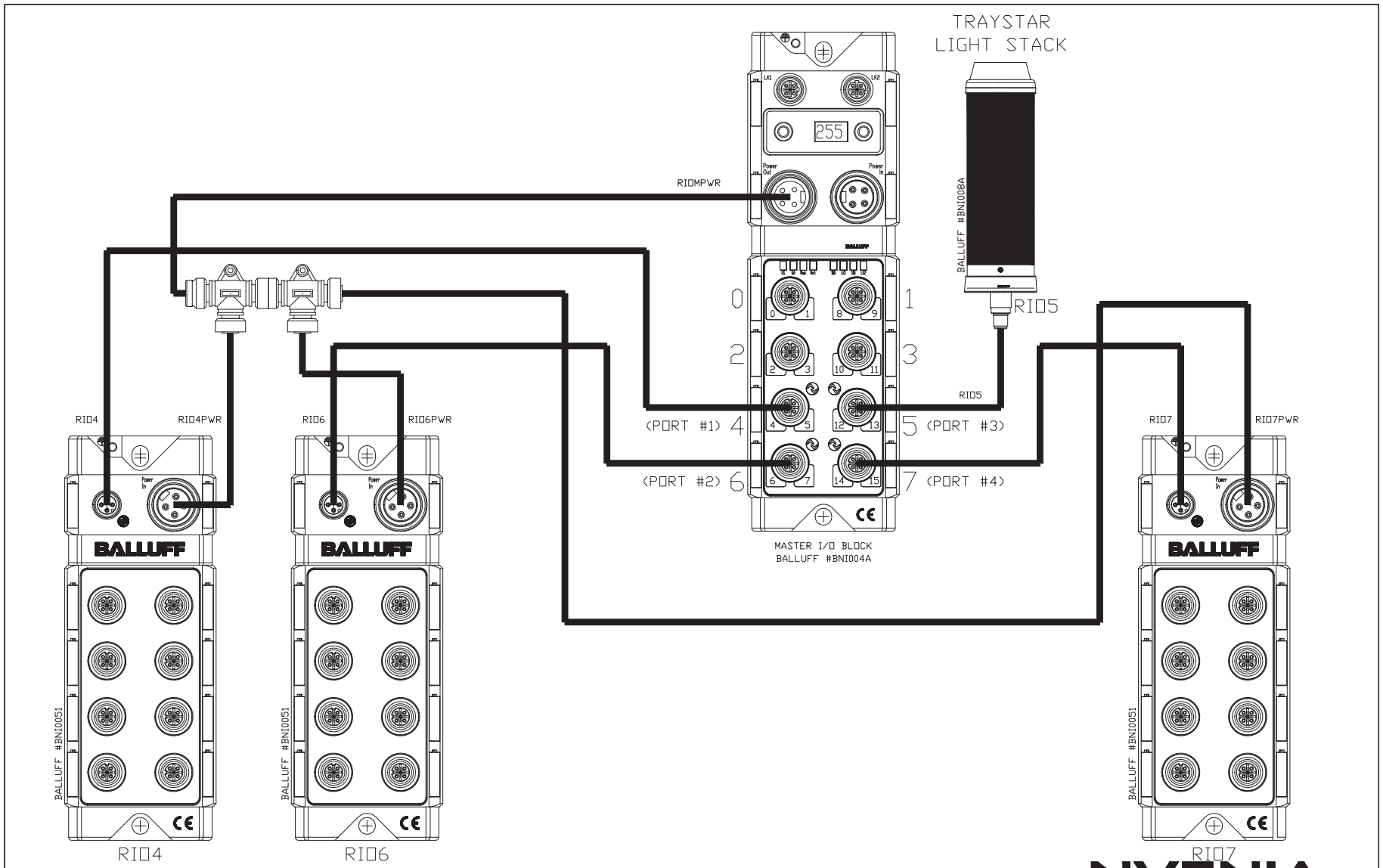

I/O BLOCK TOPOLOGY

NVENIA
A DURAVANT COMPANY

REV. A	ELECTRICAL SCHEMATIC	SIZE: B	
DESIGNER: JIT		DATE: 05/26/2021	
MODEL: TS-2300		SHEET: 11 OF	
BLUE MARBLE		DRAWING NUMBER: 210011-11	

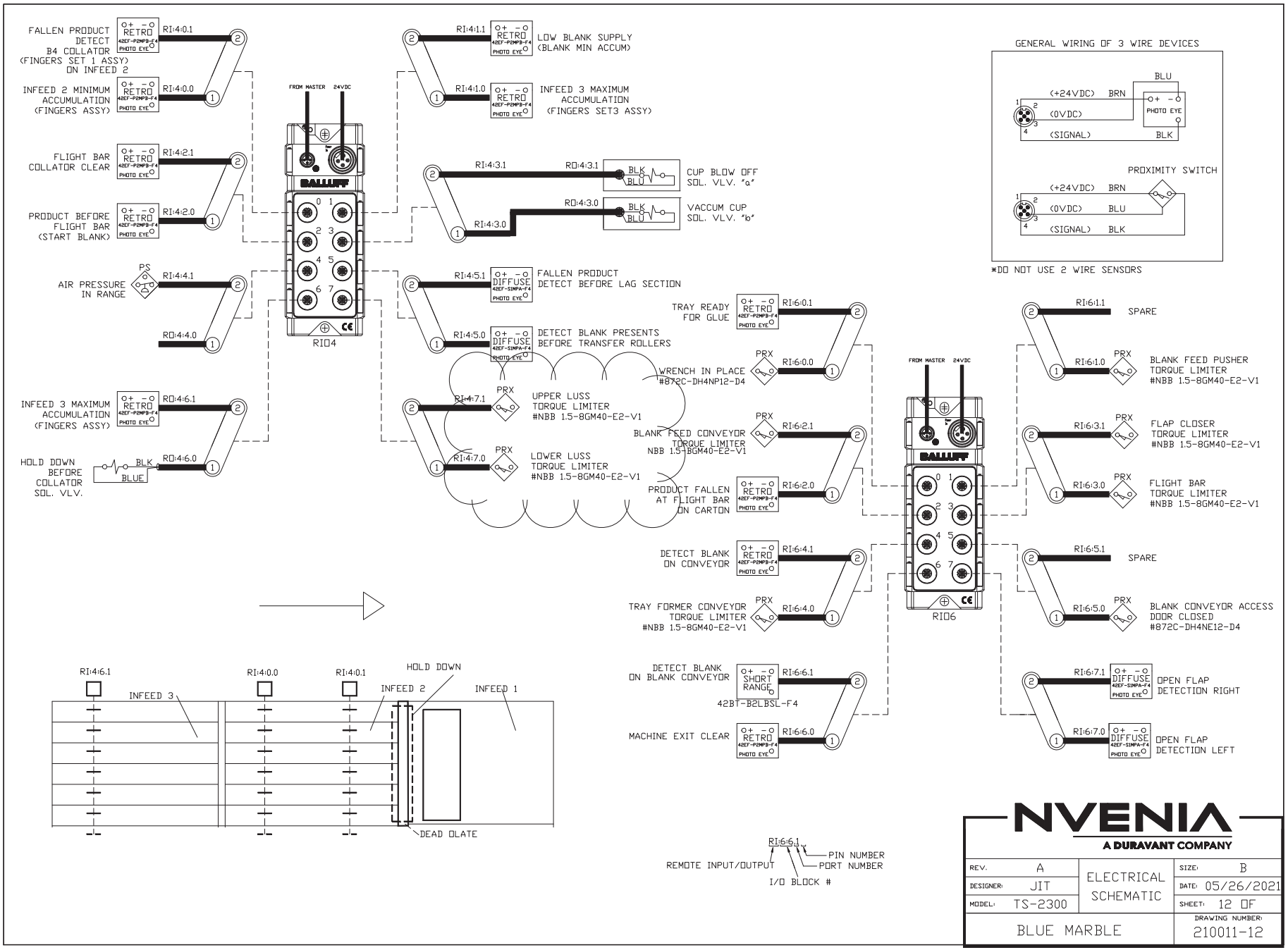
FALLEN PRODUCT DETECT B4 COLLATOR (FINGERS SET 1 ASSY) ON INFEED 2
RI:4:0.1
INFEED 2 MINIMUM ACCUMULATION (FINGERS ASSY)
RI:4:0.0
FLIGHT BAR COLLATOR CLEAR
RI:4:2.1
PRODUCT BEFORE FLIGHT BAR (START BLANK)
RI:4:2.0
AIR PRESSURE IN RANGE
PS
RI:4:4.1
RO:4:4.0
INFEED 3 MAXIMUM ACCUMULATION (FINGERS ASSY)
RO:4:6.1
HOLD DOWN BEFORE COLLATOR SOL. VLV.
BLK
BLUE
RO:4:6.0
FROM MASTER
24VDC
RIO4
RI:4:1.1
LOW BLANK SUPPLY (BLANK MIN ACCUM)
RI:4:1.0
INFEED 3 MAXIMUM ACCUMULATION (FINGERS SET3 ASSY)
RI:4:3.1
RO:4:3.1
CUP BLOW OFF SOL. VLV. "a"
RI:4:3.0
RO:4:3.0
VACCUM CUP SOL. VLV. "b"
RI:4:5.1
FALLEN PRODUCT DETECT BEFORE LAG SECTION
RI:4:5.0
DETECT BLANK PRESENTS BEFORE TRANSFER ROLLERS
RI:4:7.1
UPPER LUSS TORQUE LIMITER #NBB 1.5-8GM40-E2-V1
RI:4:7.0
LOWER LUSS TORQUE LIMITER #NBB 1.5-8GM40-E2-V1
PRX
TRAY READY FOR GLUE
RI:6:0.1
WRENCH IN PLACE #872C-DH4NP12-D4
RI:6:0.0
BLANK FEED CONVEYOR TORQUE LIMITER NBB 1.5-8GM40-E2-V1
RI:6:2.1
PRODUCT FALLEN AT FLIGHT BAR ON CARTON
RI:6:2.0
DETECT BLANK ON CONVEYOR
RI:6:4.1
TRAY FORMER CONVEYOR TORQUE LIMITER #NBB 1.5-8GM40-E2-V1
RI:6:4.0
DETECT BLANK ON BLANK CONVEYOR
SHORT RANGE
RI:6:6.1
42BT-B2LBSL-F4
MACHINE EXIT CLEAR
RI:6:6.0
RIO6
RI:6:1.1
SPARE
RI:6:1.0
BLANK FEED PUSHER TORQUE LIMITER #NBB 1.5-8GM40-E2-V1
RI:6:3.1
FLAP CLOSER TORQUE LIMITER #NBB 1.5-8GM40-E2-V1
RI:6:3.0
FLIGHT BAR TORQUE LIMITER #NBB 1.5-8GM40-E2-V1
RI:6:5.1
SPARE
RI:6:5.0
BLANK CONVEYOR ACCESS DOOR CLOSED #872C-DH4NE12-D4
RI:6:7.1
OPEN FLAP DETECTION RIGHT
RI:6:7.0
OPEN FLAP DETECTION LEFT
GENERAL WIRING OF 3 WIRE DEVICES
(+24VDC) BRN
(0VDC) BLU
(SIGNAL) BLK
PHOTO EYE
PROXIMITY SWITCH
*DO NOT USE 2 WIRE SENSORS
RI:4:6.1
RI:4:0.0
RI:4:0.1
HOLD DOWN
INFEED 3
INFEED 2
INFEED 1
DEAD PLATE
RI:6:6.1
PIN NUMBER
PORT NUMBER
REMOTE INPUT/OUTPUT
I/O BLOCK #
NVENIA
A DURAVANT COMPANY
REV. A
DESIGNER: JIT
MODEL: TS-2300
ELECTRICAL SCHEMATIC
SIZE: B
DATE: 05/26/2021
SHEET: 12 OF
BLUE MARBLE
DRAWING NUMBER: 210011-12

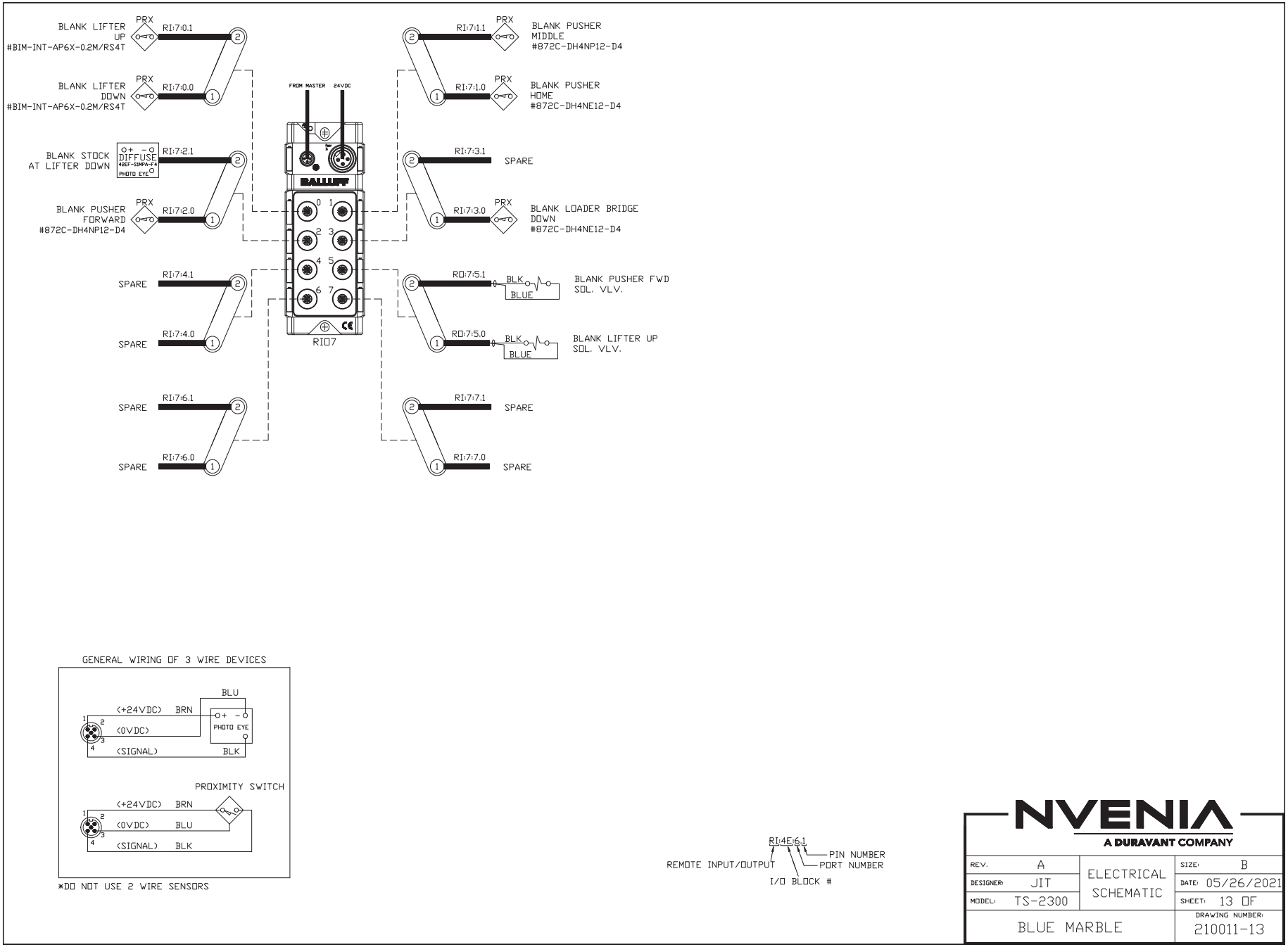

NVENIA
A DURAVANT COMPANY

REV. A	ELECTRICAL SCHEMATIC	SIZE: B	
DESIGNER: JIT		DATE: 05/26/2021	
MODEL: TS-2300		SHEET: 13 OF	
BLUE MARBLE		DRAWING NUMBER: 210011-13	

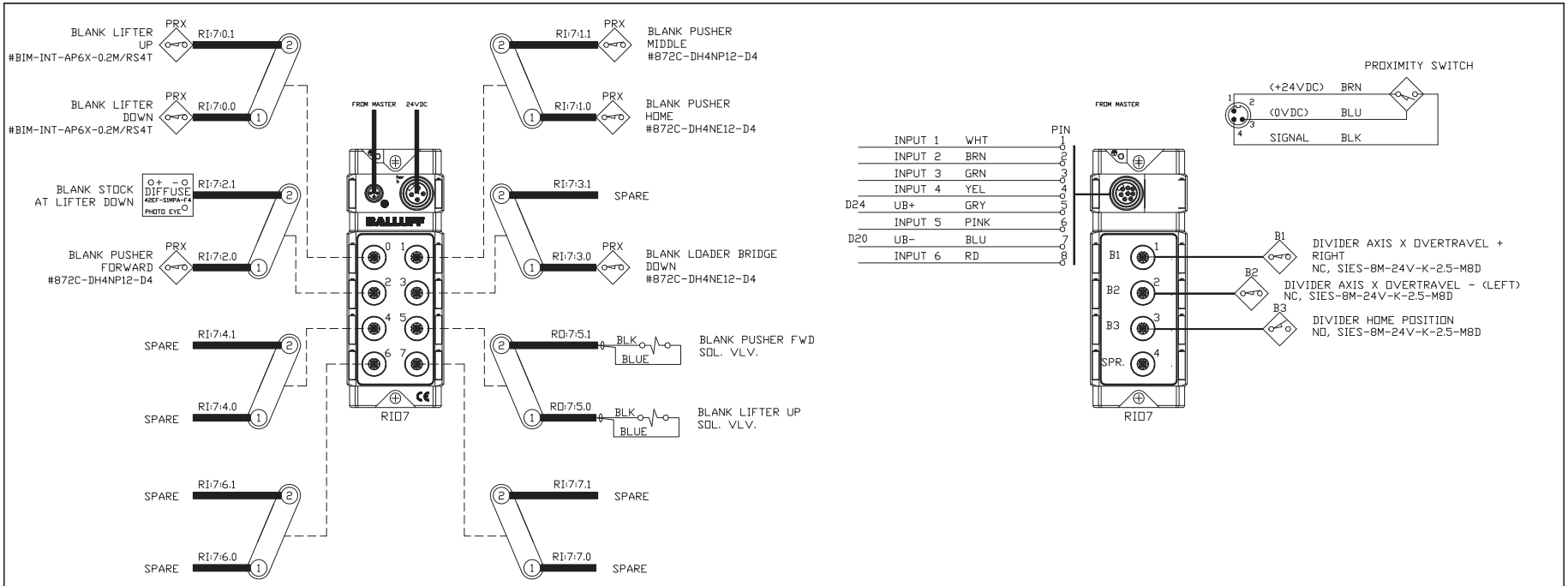

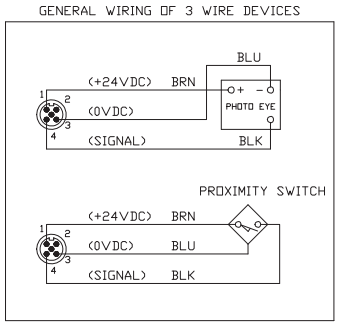

*DO NOT USE 2 WIRE SENSORS

RI:4E:6.1

REMOTE INPUT/OUTPUT

I/O BLOCK #

PORT NUMBER

PIN NUMBER

NVENIA
A DURAVANT COMPANY

REV. A	ELECTRICAL SCHEMATIC	SIZE: B	
DESIGNER: JIT		DATE: 05/26/2021	
MODEL: TS-2300		SHEET: 13 OF	
BLUE MARBLE		DRAWING NUMBER: 210011-13	

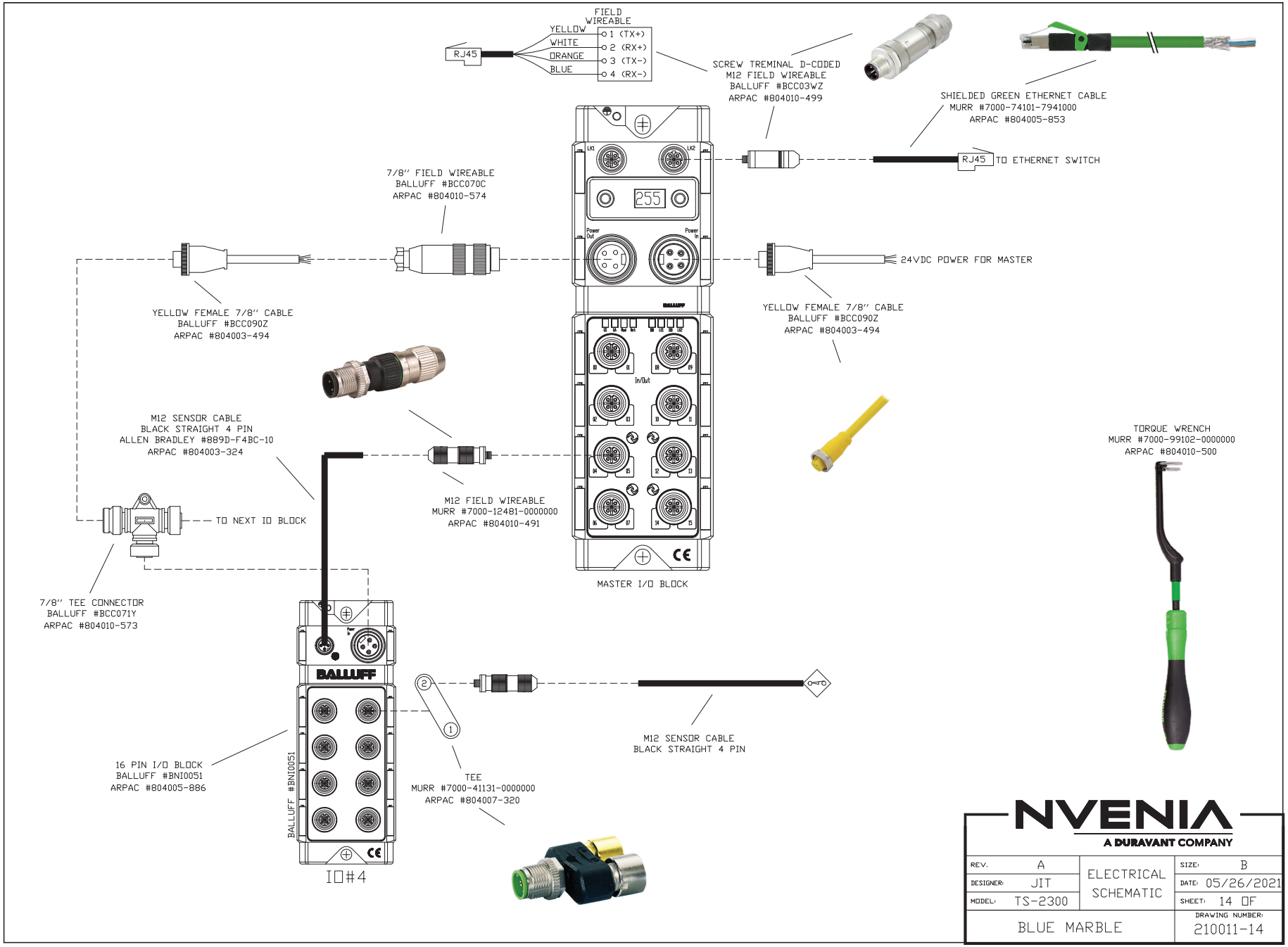

NVENIA
A DURAVANT COMPANY

REV. A	ELECTRICAL SCHEMATIC	SIZE: B	
DESIGNER: JIT		DATE: 05/26/2021	
MODEL: TS-2300		SHEET: 14 OF	
BLUE MARBLE		DRAWING NUMBER: 210011-14	

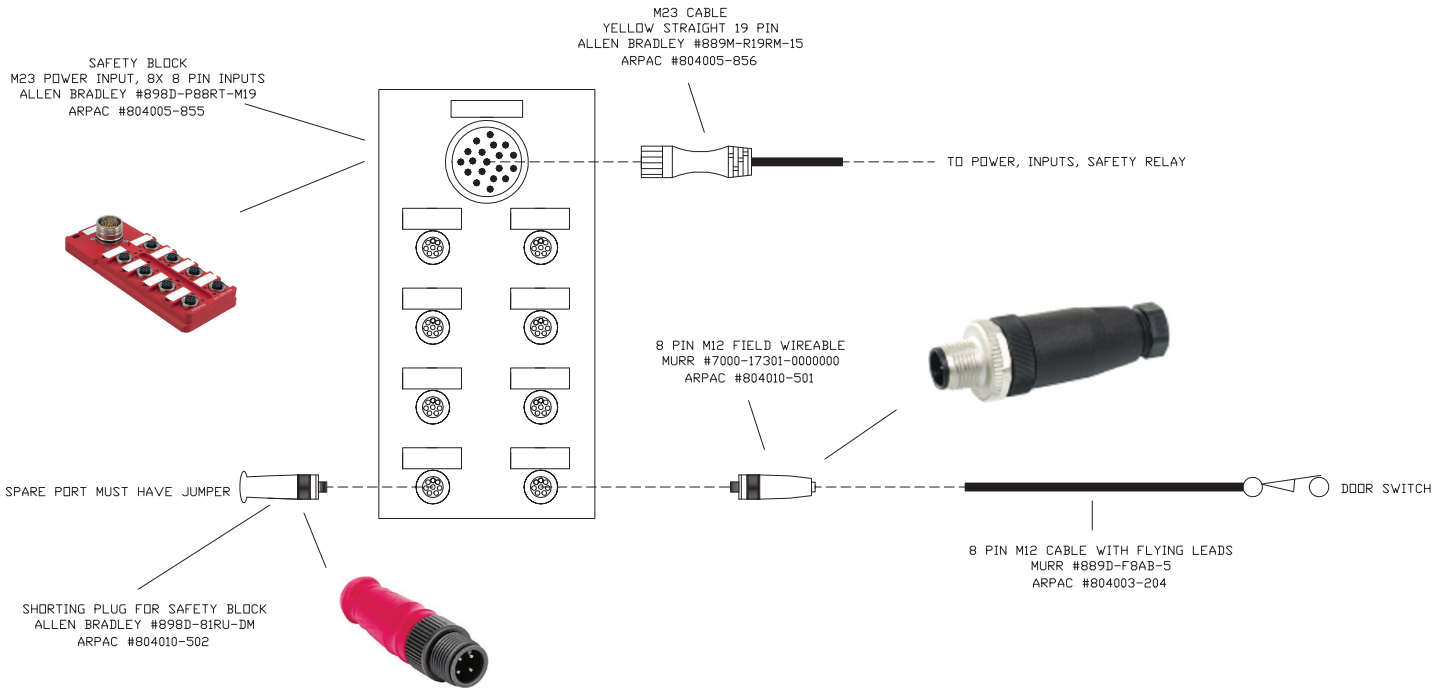

NVENIA
A DURAVANT COMPANY

REV. A	ELECTRICAL SCHEMATIC	SIZE: B	
DESIGNER: JIT		DATE: 05/26/2021	
MODEL: TS-2300		SHEET: 15 OF	
BLUE MARBLE		DRAWING NUMBER: 210011-15	

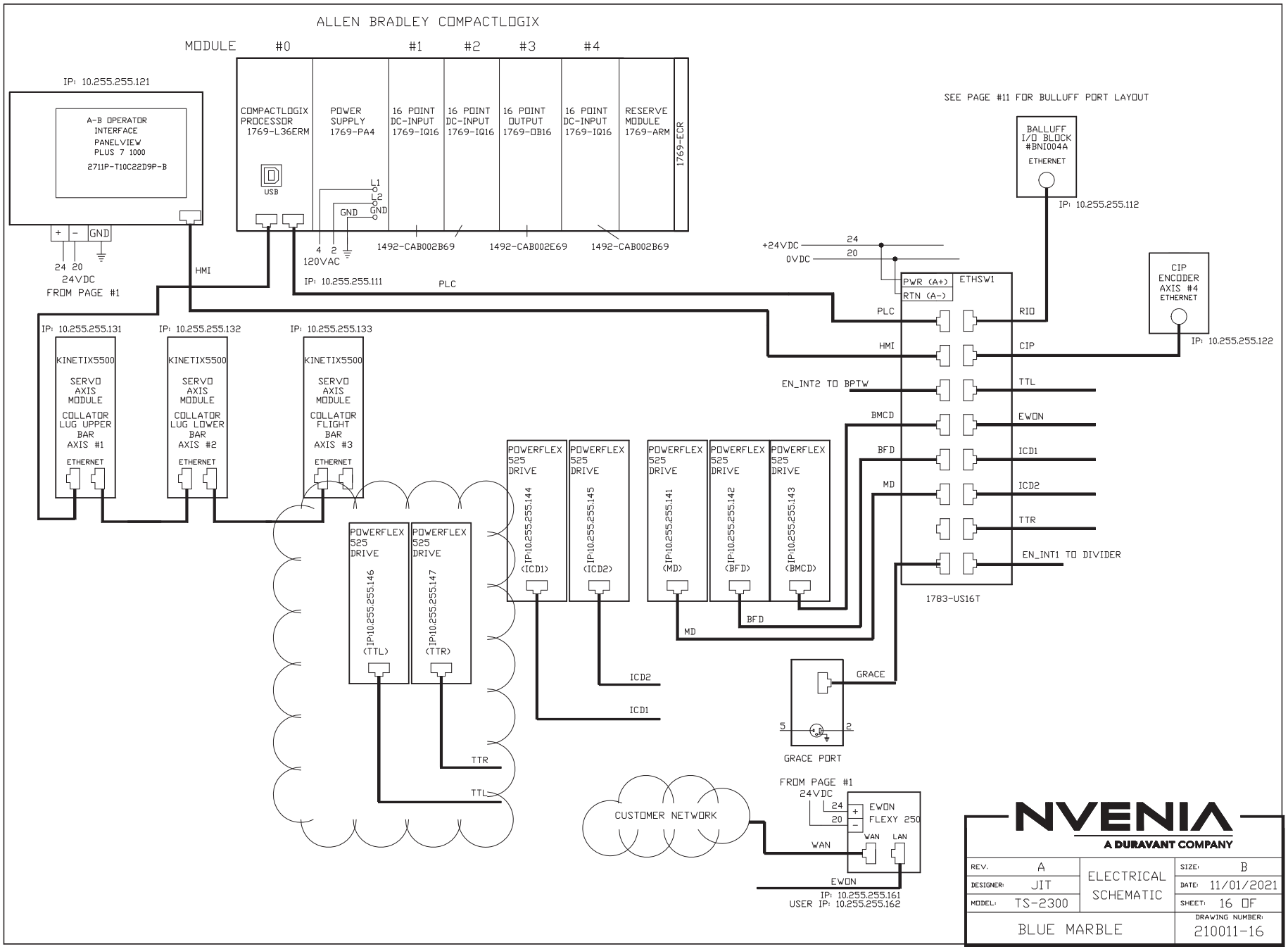
ALLEN BRADLEY COMPACTLOGIX
MODULE #0 #1 #2 #3 #4
IP: 10.255.255.121
A-B OPERATOR INTERFACE PANELVIEW PLUS 7 1000
2711P-T10C22D9P-B
COMPACTLOGIX PROCESSOR 1769-L36ERM
USB
POWER SUPPLY 1769-PA4
16 POINT DC-INPUT 1769-IQ16
16 POINT DC-INPUT 1769-IQ16
16 POINT OUTPUT 1769-OB16
16 POINT DC-INPUT 1769-IQ16
RESERVE MODULE 1769-ARM
1769-ECR
L1
L2
GND
GND
4 2
120VAC
IP: 10.255.255.111
1492-CAB002B69
1492-CAB002E69
1492-CAB002B69
+ - GND
24 20
24VDC
FROM PAGE #1
HMI
PLC
SEE PAGE #11 FOR BULLUFF PORT LAYOUT
BALLUFF I/O BLOCK #BNI004A
ETHERNET
IP: 10.255.255.112
+24VDC
0VDC
24
20
PWR (A+)
RTN (A-)
ETHSW1
PLC
HMI
EN_INT2 TO BPTW
BMCD
BFD
MD
RIO
CIP
TTL
EWON
ICD1
ICD2
TTR
EN_INT1 TO DIVIDER
1783-US16T
CIP ENCODER AXIS #4 ETHERNET
IP: 10.255.255.122
IP: 10.255.255.131
IP: 10.255.255.132
IP: 10.255.255.133
KINETIX5500 SERVO AXIS MODULE COLLATOR LUG UPPER BAR AXIS #1
KINETIX5500 SERVO AXIS MODULE COLLATOR LUG LOWER BAR AXIS #2
KINETIX5500 SERVO AXIS MODULE COLLATOR FLIGHT BAR AXIS #3
ETHERNET
POWERFLEX 525 DRIVE
IP:10.255.255.144 (ICD1)
IP:10.255.255.145 (ICD2)
IP:10.255.255.141 (MD)
IP:10.255.255.142 (BFD)
IP:10.255.255.143 (BMCD)
IP:10.255.255.146 (TTL)
IP:10.255.255.147 (TTR)
ICD2
ICD1
TTR
TTL
MD
BFD
GRACE
5
2
GRACE PORT
CUSTOMER NETWORK
FROM PAGE #1
24VDC
24
20
EWON FLEXY 250
WAN
LAN
WAN
EWON
IP: 10.255.255.161
USER IP: 10.255.255.162
NVENIA
A DURAVANT COMPANY
REV. A
DESIGNER: JIT
MODEL: TS-2300
ELECTRICAL SCHEMATIC
SIZE: B
DATE: 11/01/2021
SHEET: 16 OF
BLUE MARBLE
DRAWING NUMBER: 210011-16

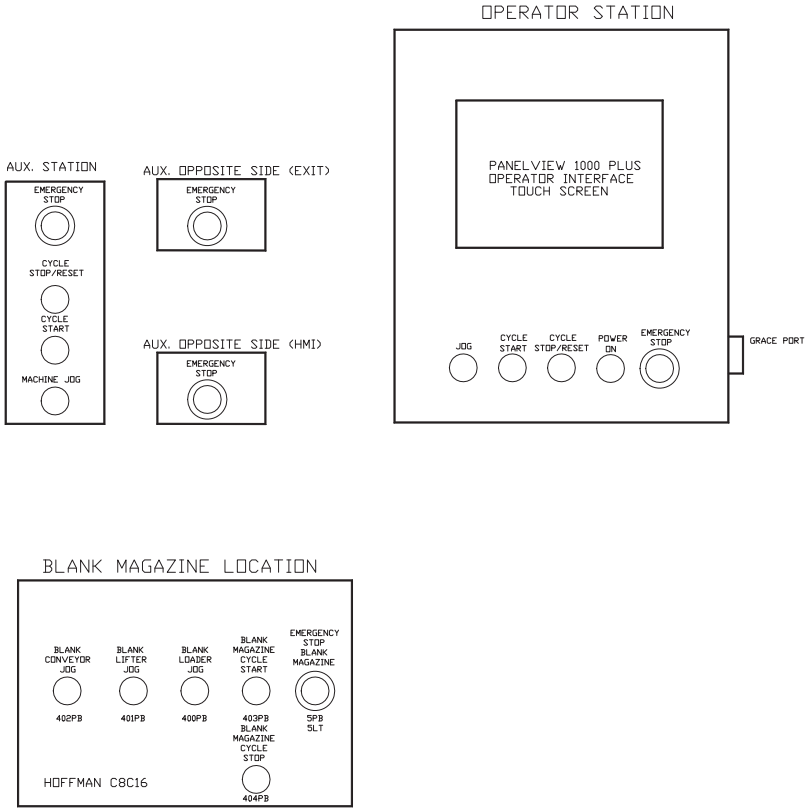

NVENIA
A DURAVANT COMPANY

REV. A	ELECTRICAL SCHEMATIC	SIZE: B	
DESIGNER: JIT		DATE: 05/26/2021	
MODEL: TS-2300		SHEET: 17 OF	
BLUE MARBLE		DRAWING NUMBER: 210011-17	

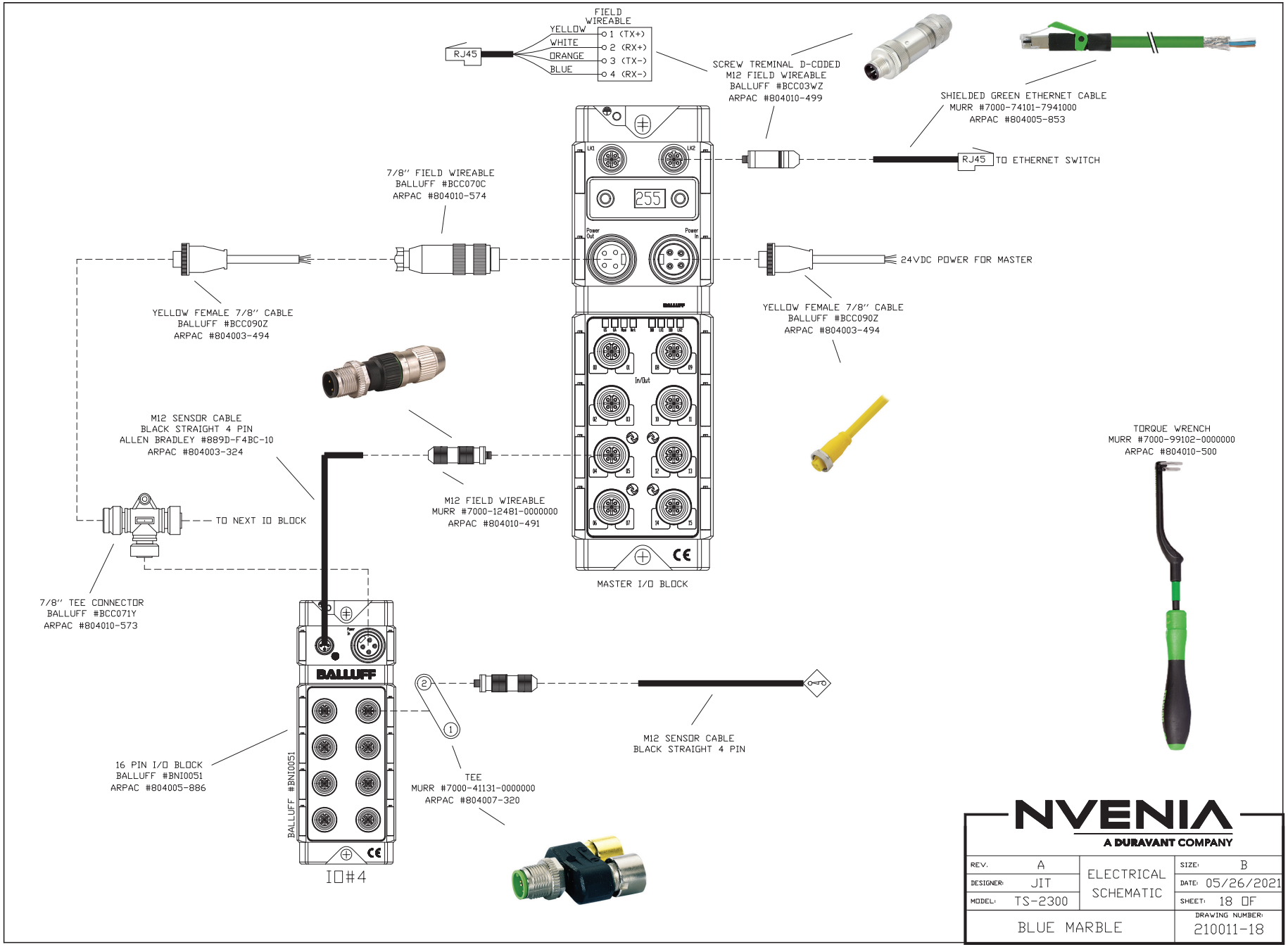

NVENIA
A DURAVANT COMPANY

REV. A	ELECTRICAL SCHEMATIC	SIZE: B	
DESIGNER: JIT		DATE: 05/26/2021	
MODEL: TS-2300		SHEET: 18 OF	
BLUE MARBLE		DRAWING NUMBER: 210011-18	

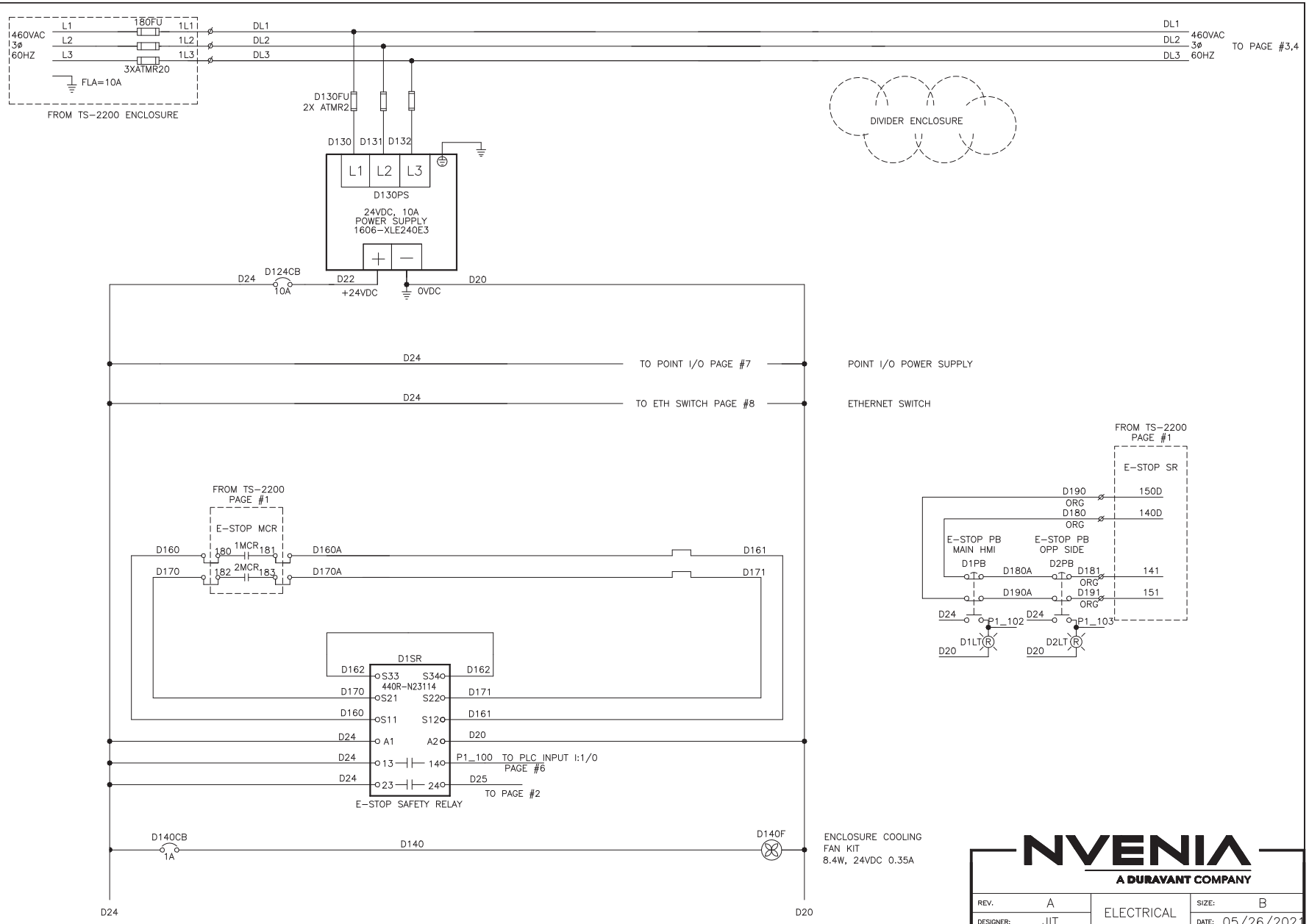

NVENIA
A DURAVANT COMPANY

REV. A	ELECTRICAL SCHEMATIC	SIZE: B	
DESIGNER: JIT		DATE: 05/26/2021	
MODEL: TS-2300		SHEET: 1 OF	
BLUE MARBLE		DRAWING NUMBER: 210011-DD01	

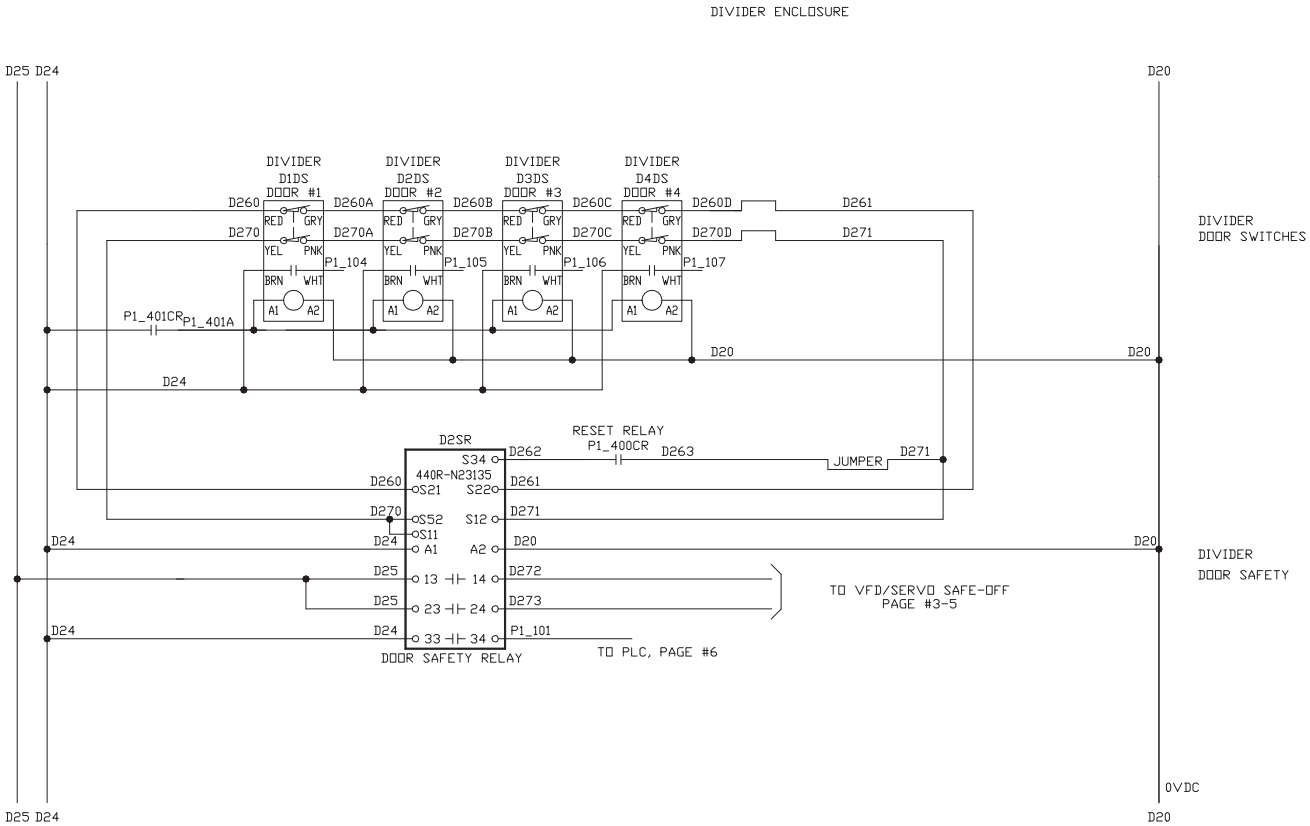

440G-T2NBBPH-1L LOCKABLE LOCKABLE DOOR SWITCH TERMINAL WIRING

TERMINAL	COLOR	DESCRIPTION
A1	GRN	SOLENOID POWER
A2	BLUE	0VDC
11	RED	SAFETY A
12	RED/BLK	SAFETY A
21	RED/WHT	SAFETY B
22	RED/YEL	SAFETY B
33	BRN	+24 VDC
34	WHT	AUX. CONTACT (TO PLC)
41	N/A	*NOT CONNECTED
42	N/A	*NOT CONNECTED
53	N/A	*NOT CONNECTED
54	N/A	*NOT CONNECTED

**REMOVE JUMPER BETWEEN 12 AND 41

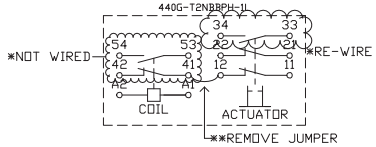

NVENIA
A DURAVANT COMPANY

REV. A	ELECTRICAL SCHEMATIC	SIZE: B	
DESIGNER: JIT		DATE: 05/26/2021	
MODEL: TS-2300		SHEET: 2 OF	
BLUE MARBLE		DRAWING NUMBER: 210011-DD02	

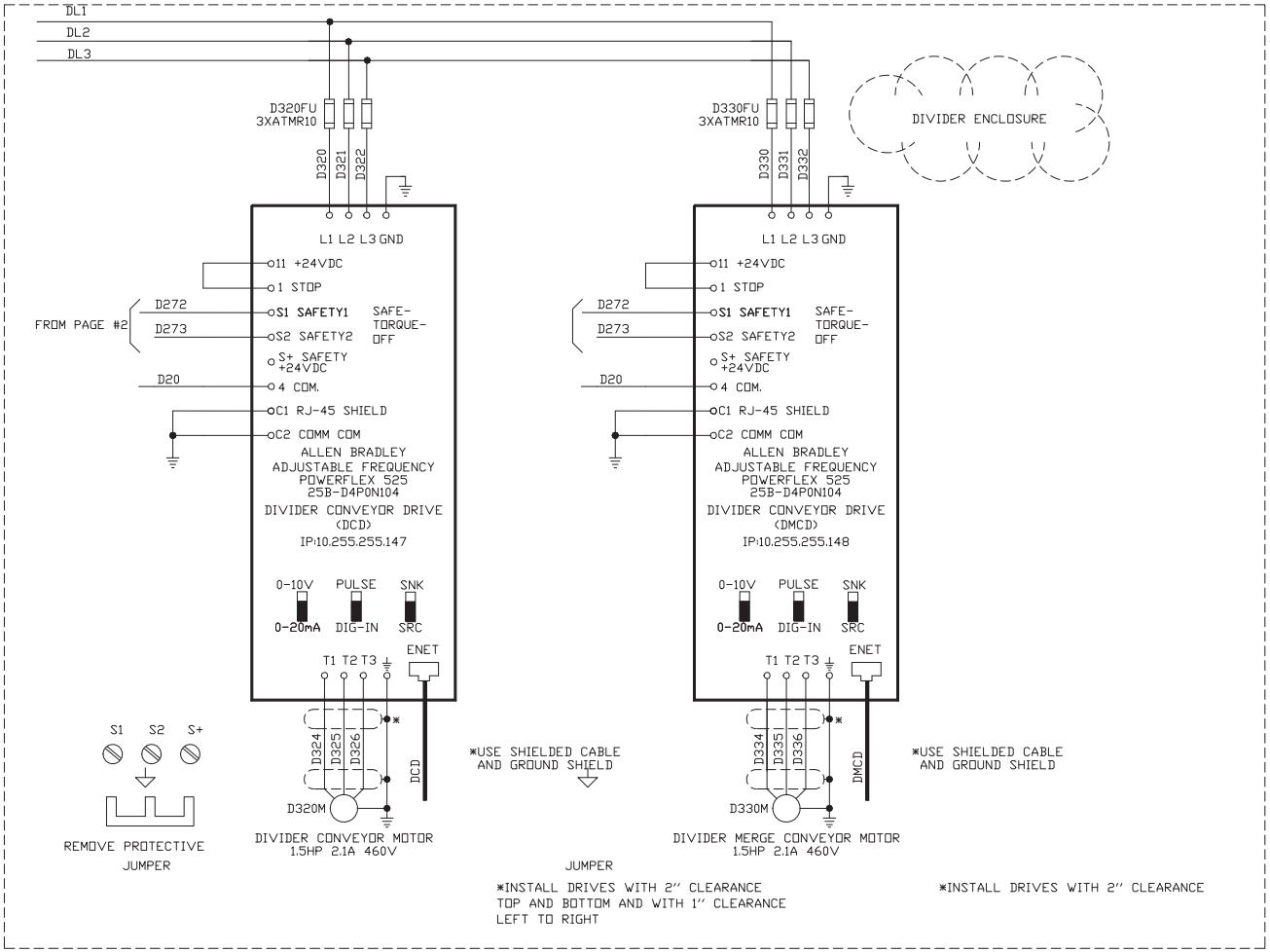

0103CB

CIRCUIT BREAKER NUMBER

PAGE NUMBER

POWER FLEX 525 DRIVE SET UP (DIFFERENT THAN DEFAULT)

DISPLAY	PARAMETER DESCRIPTIONS	SETTING
P031	RATED VOLTAGE	460
P033	MOTOR OL CURRENT	*
P046	START SOURCE 1	5 (ETH)
P047	SPEED REFERENCE 1	15 (ETH)
P041	ACCELERATION TIME	1 SEC
P042	DECELERATION TIME	1 SEC
P044	MAX FREQUENCY	90 HZ
A541	AUTO RESTART TRIES	0.0
A543	START AT POWER UP	1.0

* SET TO THE MAXIMUM ALLOWABLE MOTOR CURRENT

POWER FLEX 525 DRIVE SET UP (DIFFERENT THAN DEFAULT)

DISPLAY	PARAMETER DESCRIPTIONS	SETTING
C128	EN ADDR SELECT	1
C129	EN IP ADDR CFG 1	10
C130	EN IP ADDR CFG 2	255
C131	EN IP ADDR CFG 3	255
C132	EN IP ADDR CFG 4	**
C133	EN SUBNET CFG 1	255
C134	EN SUBNET CFG 2	255
C135	EN SUBNET CFG 3	255
C136	EN SUBNET CFG 4	0

**SEE PAGE #8 FOR LAST IP NUMBER

NVENIA
A DURAVANT COMPANY

REV. A	ELECTRICAL SCHEMATIC	SIZE: B	
DESIGNER: JIT		DATE: 04/20/2021	
MODEL: TS-2300		SHEET: 3 OF	
BLUE MARBLE		DRAWING NUMBER: 210011-DD01	

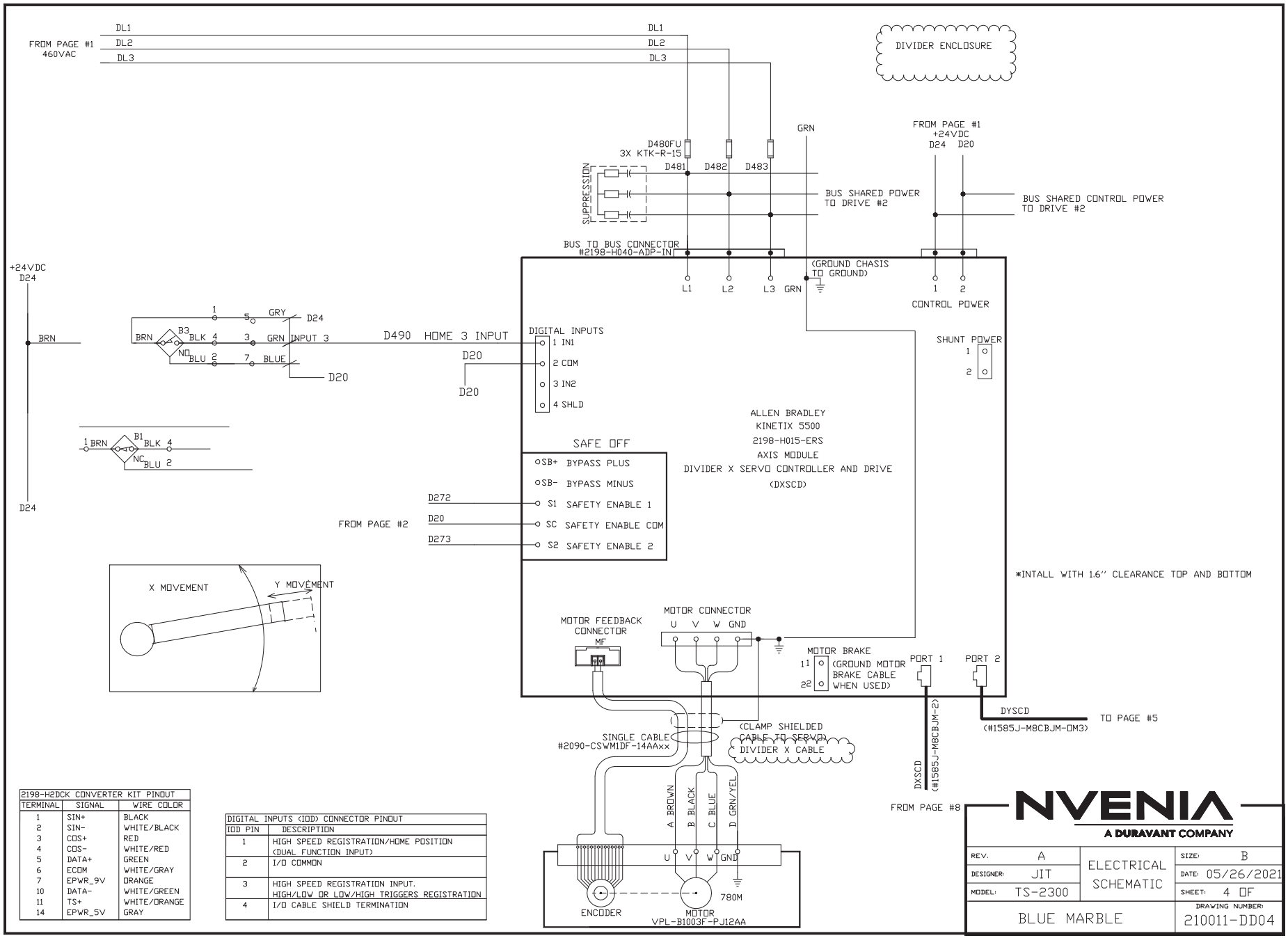

2198-H2DCK CONVERTER KIT PINOUT		
TERMINAL	SIGNAL	WIRE COLOR
1	SIN+	BLACK
2	SIN-	WHITE/BLACK
3	COS+	RED
4	COS-	WHITE/RED
5	DATA+	GREEN
6	ECOM	WHITE/GRAY
7	EPWR_9V	ORANGE
10	DATA-	WHITE/GREEN
11	TS+	WHITE/ORANGE
14	EPWR_5V	GRAY

DIGITAL INPUTS (IOD) CONNECTOR PINOUT	
IOD PIN	DESCRIPTION
1	HIGH SPEED REGISTRATION/HOME POSITION (DUAL FUNCTION INPUT)
2	I/O COMMON
3	HIGH SPEED REGISTRATION INPUT. HIGH/LOW OR LOW/HIGH TRIGGERS REGISTRATION
4	I/O CABLE SHIELD TERMINATION

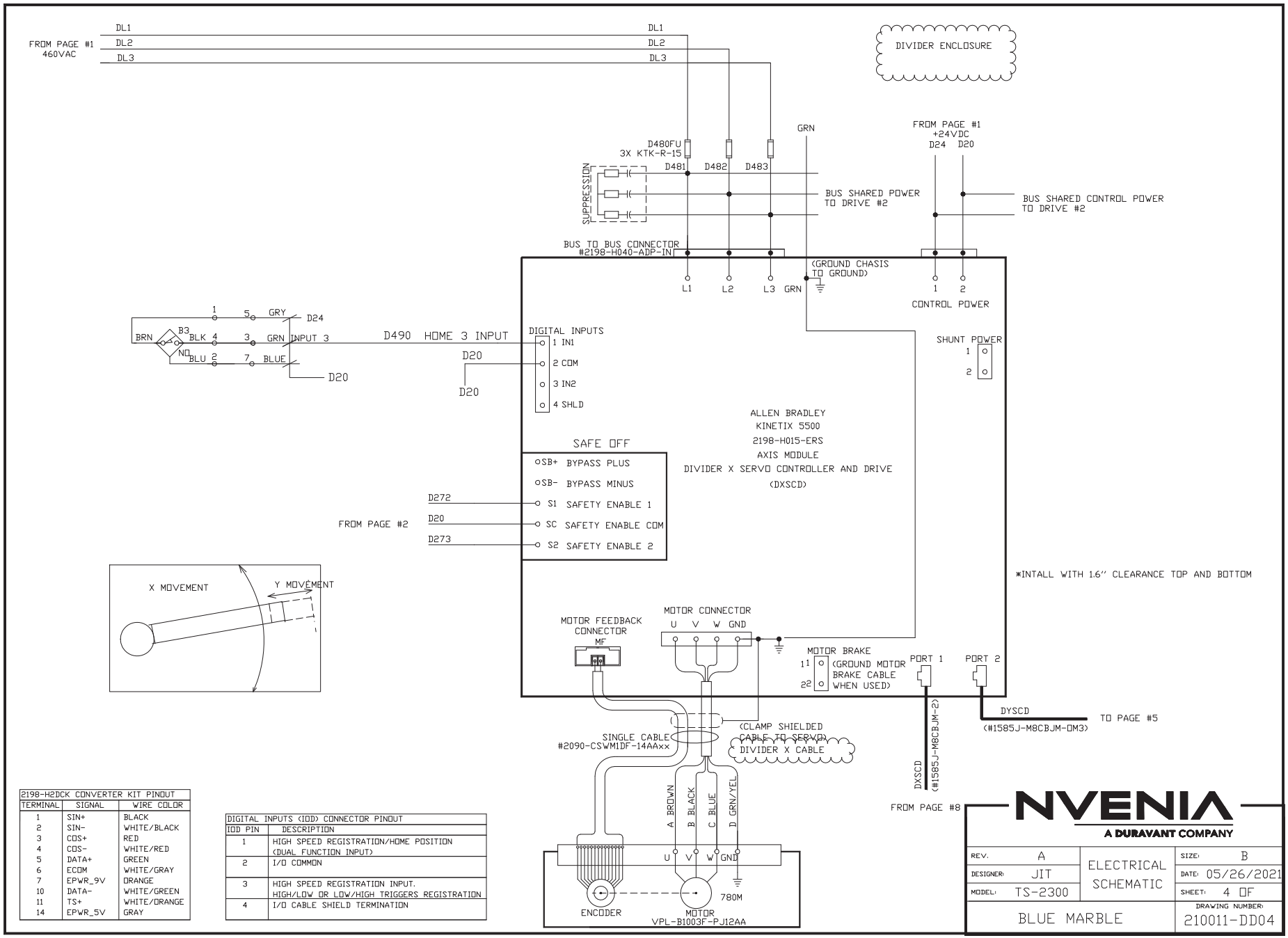

2198-H2DCK CONVERTER KIT PINOUT		
TERMINAL	SIGNAL	WIRE COLOR
1	SIN+	BLACK
2	SIN-	WHITE/BLACK
3	COS+	RED
4	COS-	WHITE/RED
5	DATA+	GREEN
6	ECOM	WHITE/GRAY
7	EPWR_9V	ORANGE
10	DATA-	WHITE/GREEN
11	TS+	WHITE/ORANGE
14	EPWR_5V	GRAY

DIGITAL INPUTS (IOD) CONNECTOR PINOUT	
IOD PIN	DESCRIPTION
1	HIGH SPEED REGISTRATION/HOME POSITION (DUAL FUNCTION INPUT)
2	I/O COMMON
3	HIGH SPEED REGISTRATION INPUT. HIGH/LOW OR LOW/HIGH TRIGGERS REGISTRATION
4	I/O CABLE SHIELD TERMINATION

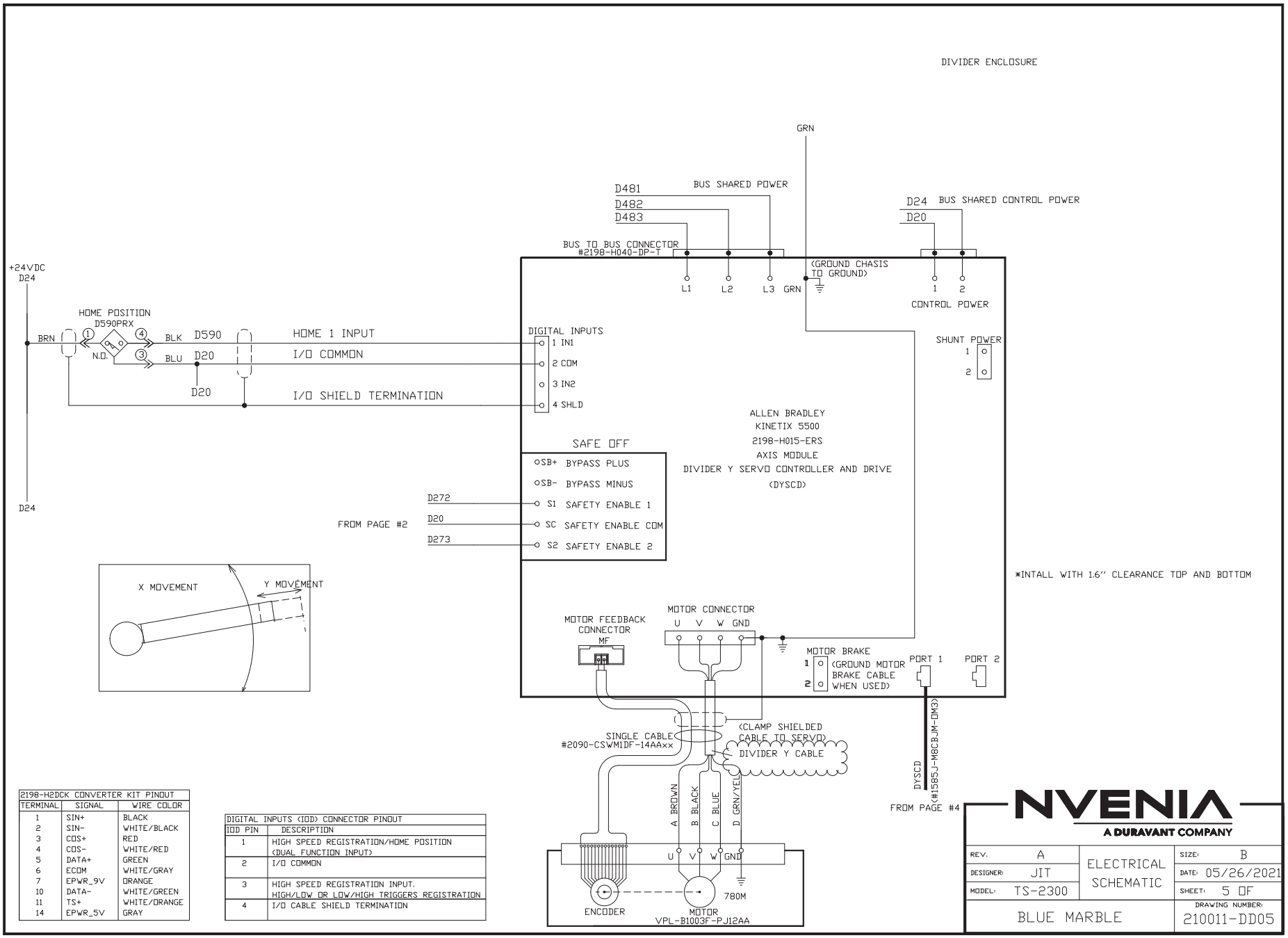

2198-H2DCK CONVERTER KIT PINOUT		
TERMINAL	SIGNAL	WIRE COLOR
1	SIN+	BLACK
2	SIN-	WHITE/BLACK
3	COS+	RED
4	COS-	WHITE/RED
5	DATA+	GREEN
6	ECOM	WHITE/GRAY
7	EPWR_9V	ORANGE
10	DATA-	WHITE/GREEN
11	TS+	WHITE/ORANGE
14	EPWR_5V	GRAY

DIGITAL INPUTS (IOD) CONNECTOR PINOUT	
IOD PIN	DESCRIPTION
1	HIGH SPEED REGISTRATION/HOME POSITION (DUAL FUNCTION INPUT)
2	I/O COMMON
3	HIGH SPEED REGISTRATION INPUT. HIGH/LOW OR LOW/HIGH TRIGGERS REGISTRATION
4	I/O CABLE SHIELD TERMINATION

DIVIDER ENCLOSURE

POINT I/O RACK #1 - INPUT MODULE #1

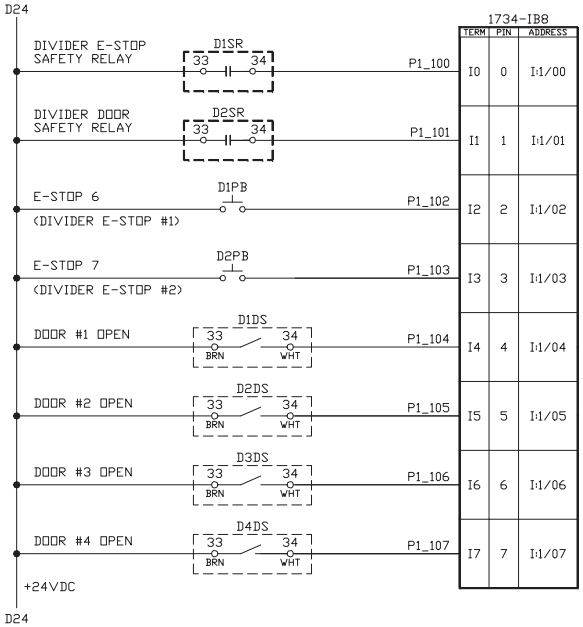

POINT I/O RACK #1 - INPUT MODULE #2

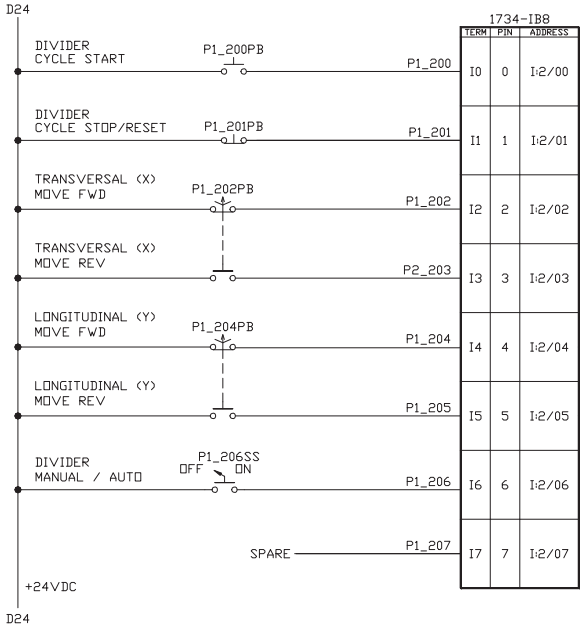

TERMINAL LAYOUT FOR 1734-IB8

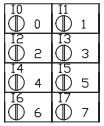

1734-TB

NVENIA
A DURAVANT COMPANY

REV: A	ELECTRICAL SCHEMATIC	SIZE: B	
DESIGNER: JIT		DATE: 05/26/2021	
MODEL: TS-2300		SHEET: 6 OF	
BLUE MARBLE		DRAWING NUMBER: 210011-DD06	

DIVIDER ENCLOSURE

POINT I/O RACK #1 - INPUT MODULE #3

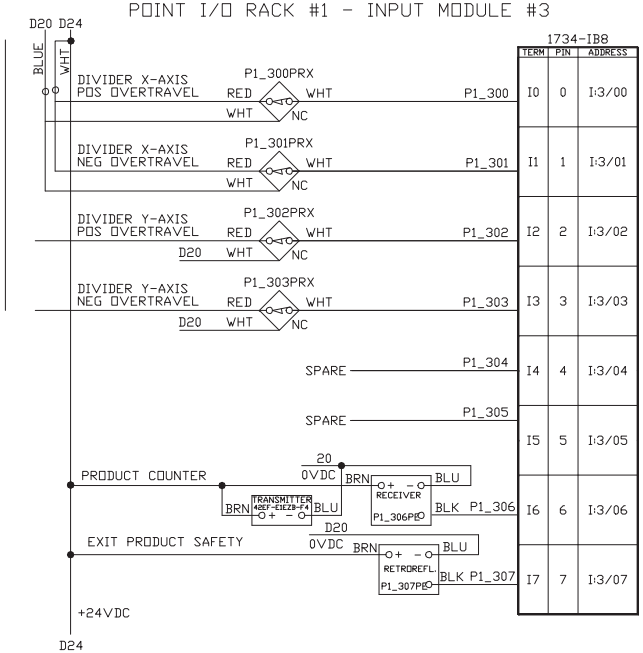

POINT I/O RACK #1 - OUTPUT MODULE #4

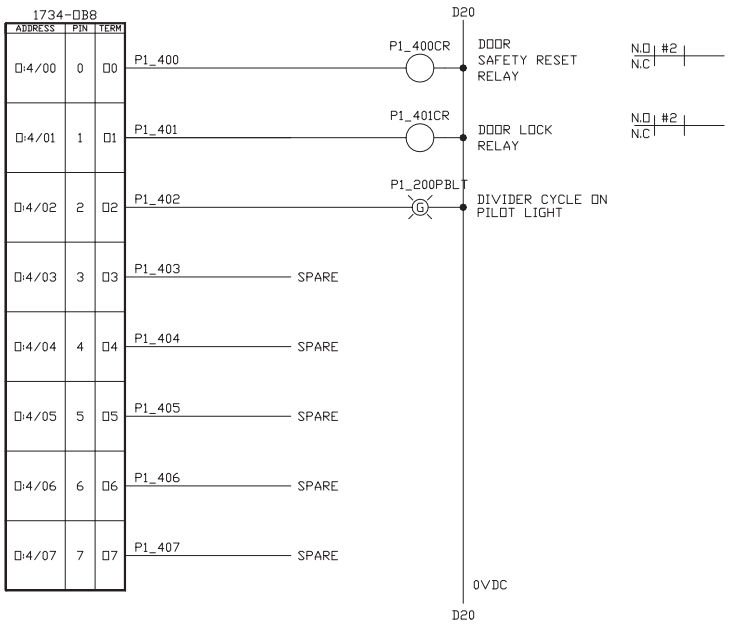

TERMINAL LAYOUT FOR 1734-OB8E

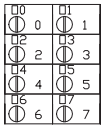

1734-TB

TERMINAL LAYOUT FOR 1734-IB8

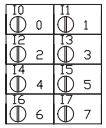

1734-TB

NVENIA
A DURAVANT COMPANY

REV. A	ELECTRICAL SCHEMATIC	SIZE: B	
DESIGNER: JIT		DATE: 10/26/2021	
MODEL: TS-2300		SHEET: 7 OF	
BLUE MARBLE		DRAWING NUMBER: 210011-DD07	

DIVIDER ENCLOSURE

MULTI-PIN PLUG DISTRIBUTOR
FESTO NEDU-L4R1-M8G3-M12G8

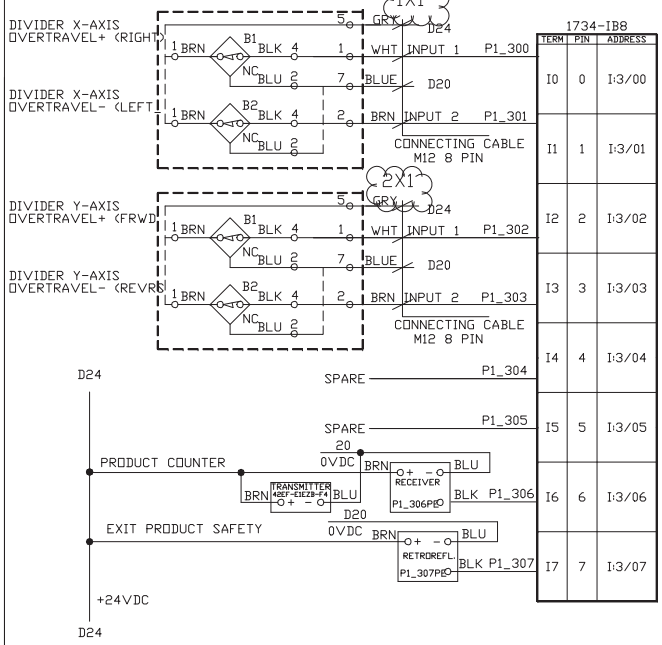

POINT I/O RACK #1 - OUTPUT MODULE #4

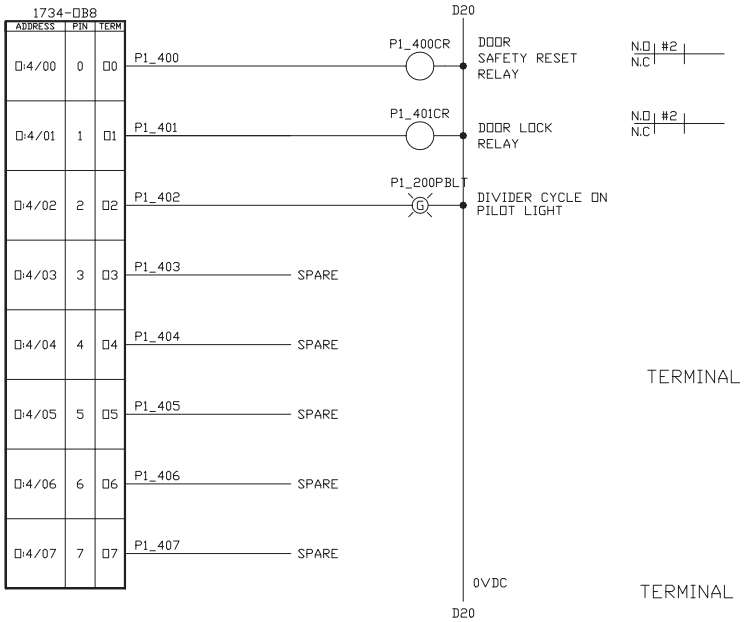

TERMINAL LAYOUT FOR 1734-OB8E

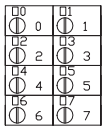

1734-TB

TERMINAL LAYOUT FOR 1734-IB8

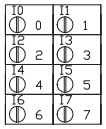

1734-TB

PROXIMITY SWITCH

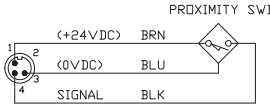

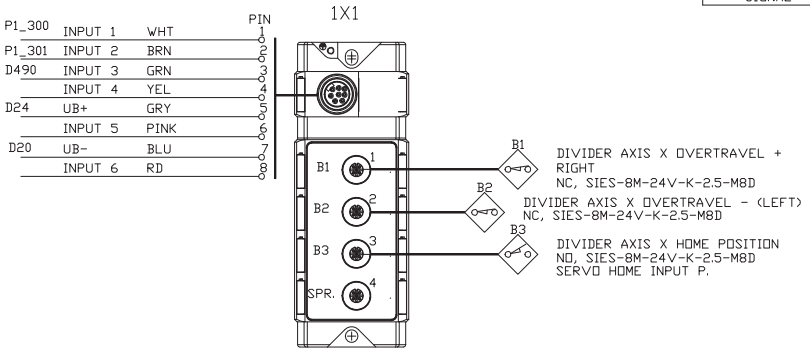

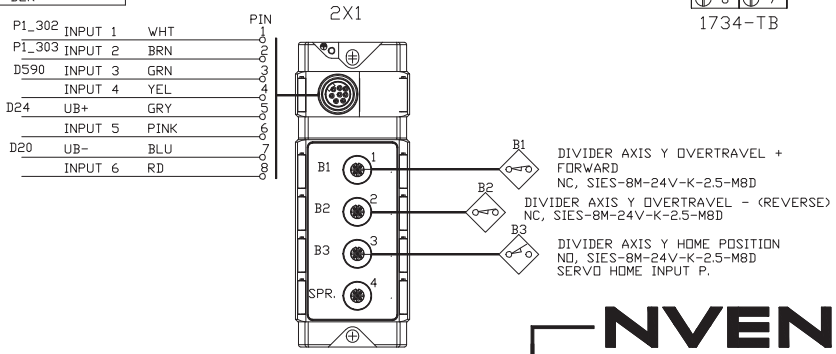

NVENIA
A DURAVANT COMPANY

REV. A	ELECTRICAL SCHEMATIC	SIZE: B	
DESIGNER: JIT		DATE: 10/26/2021	
MODEL: TS-2300		SHEET: 7 OF	
BLUE MARBLE		DRAWING NUMBER: 210011-DD07	

DIVIDER ENCLOSURE

POINT I/O RACK #1 - INPUT MODULE #5

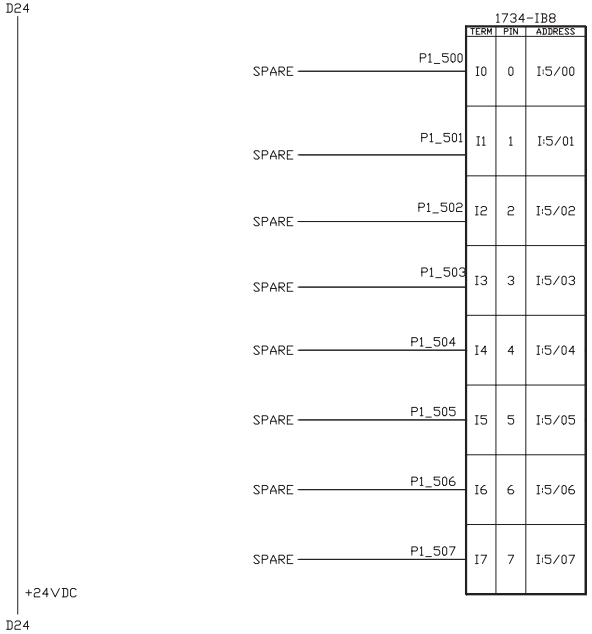

TERMINAL LAYOUT FOR 1734-IB8

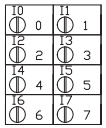

1734-TB

NVENIA
A DURAVANT COMPANY

REV. A	ELECTRICAL SCHEMATIC	SIZE: B	
DESIGNER: JIT		DATE: 05/26/2021	
MODEL: TS-2300		SHEET: 8 OF	
BLUE MARBLE		DRAWING NUMBER: 210011-DD08	

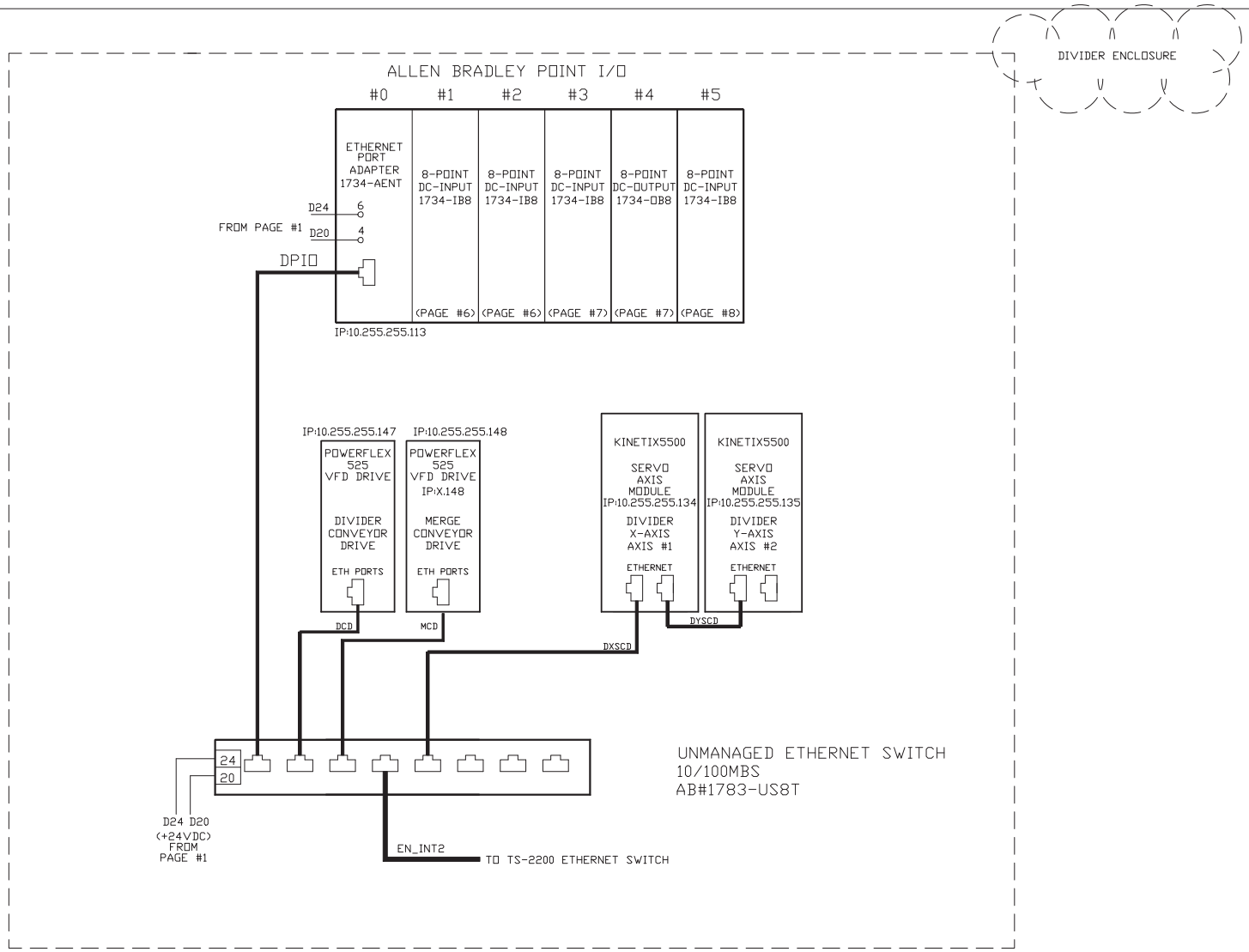

NVENIA
A DURAVANT COMPANY

REV. A	ELECTRICAL SCHEMATIC	SIZE: B	
DESIGNER: JIT		DATE: 05/26/2021	
MODEL: TS-2300		SHEET: 9 OF	
BLUE MARBLE		DRAWING NUMBER: 210011-DD09	